Remeha
AVANTA RANGE

Installation & Service Manual

Remeha Avanta Range

12v I 18v I 24v

benchmark
COLLECTIVE MARK
THE MARK OF QUALITY FOR THE INSTALLATION, COMMISSIONING AND SERVICING OF DOMESTIC HEATING AND HOT WATER SYSTEMS

spares & parts online IBASIS.CO.UK

Benchmark places responsibilities on both manufacturers and installers. The purpose is to ensure that customers are provided with the correct equipment for their needs, that it is installed, commissioned and serviced in accordance with the manufacturer's instructions by competent persons and that it meets the requirements of the appropriate Building Regulations. The Benchmark Checklist can be used to demonstrate compliance with Building Regulations and should be provided to the customer for future reference. Installers are required to carry out installation, commissioning and servicing work in accordance with the Benchmark Code of Practice which is available from the Heating and Hotwater Industry Council who manage and promote the Scheme.

Visit www.centralheating.co.uk for more information.

CONTENTS

INTRODUCTION 4

1 SAFETY 5
- 1.1 General safety 5
- 1.2 Safety during assembly and installation 5
- 1.3 Safety during installation, inspection and maintenance 5

2 INSTALLATION 7
- 2.1 Scope of delivery 7
- 2.2 Mounting the boiler 7
  - 2.2.1 Installation / maintenance clearance requirements 7
  - 2.2.2 Dimensions and connection points 8
  - 2.2.3 Mounting the Remeha Avanta 9
- 2.3 Water-side connections 9
  - 2.3.1 Water flow 9
  - 2.3.2 System Pump 9
  - 2.3.3 Pressure loss of the boiler 10
  - 2.3.4 Open-Vented System 10
  - 2.3.5 Sealed systems 10
  - 2.3.6 Additional guidelines for the domestic and CH water 10
  - 2.3.7 Water treatment 11
  - 2.3.8 Safety valve discharge 12
  - 2.3.9 Draining Provision 12
  - 2.3.10 Connecting the 'CH return' 12
  - 2.3.11 Connecting 'CH flow' 12
  - 2.3.12 Connecting condensate drain 13
- 2.4 Gas-side connections 13
  - 2.4.1 Additional guidelines for gas connections 13
  - 2.4.2 Adjusting boiler to other gas-type 13
  - 2.4.3 Connecting the gas supply 14
- 2.5 Flue terminal and air supply connections 14
  - 2.5.1 Flue terminal positions 14
  - 2.5.2 Room sealed flue 16
  - 2.5.3 Connecting the flue terminal and air supply 16
- 2.6 Electrical connection 17
  - 2.6.1 The control unit 17
- 2.7 Connecting external controls 18
  - 2.7.1 Connecting an on/off control – room temperature (volt free switching) 19
  - 2.7.2 Connecting a time control using an external 230 V clock 20
  - 2.7.3 Connecting a 230 V time clock in combination with a modulating room control 20
  - 2.7.4 Connecting a modulating control – room or outside compensation 21
  - 2.7.5 Connecting an outside temperature sensor 21
  - 2.7.6 Connecting the DHW sensor/thermostat 22
  - 2.7.7 Connecting a three-way valve 22
  - 2.7.8 Connecting a frost thermostat 22
  - 2.7.9 Connecting an external interlock 23

2.7.10 Connecting remote alarm and boiler run indication . . . 23
2.7.11 Connecting a PC/PDA . . . 24
2.8 Connecting an external pump . . . 24
2.9 Wiring diagram . . . 25
2.10 Commissioning . . . 26
2.10.1 Control Panel . . . 26
2.10.2 Additional guidelines for commissioning . . . 26
2.10.3 Putting the boiler into operation . . . 26
2.10.4 Normal start-up procedure . . . 32
2.10.5 Error during the start-up procedure . . . 32
2.10.6 Read out settings . . . 33
2.10.7 Adjust the boiler according to the system . . . 34
2.10.8 Changing the parameters at service level (with access code) . . . 34
2.10.9 Changing the maximum output (Hi) for CH operation . . . 37
2.10.10 Restore factory settings . . . 38
2.11 Putting the boiler out of operation . . . 38
2.11.1 Boiler with frost protection, during longer periods of non-use . . . 38
2.11.2 Boiler without frost protection, during longer periods of non-use . . . 38

3 INSPECTION AND MAINTENANCE . . . 39
3.1 Inspection . . . 39
3.1.1 Checking the flue pipes and air supply pipes for leaks . . . 39
3.1.2 Checking the condensate siphon . . . 40
3.1.3 Checking the ignition electrode . . . 40
3.1.4 Checking the combustion . . . 41
3.2 Maintenance . . . 42

4 ERRORS . . . 46
4.1 General . . . 46
4.2 Error codes . . . 46
4.3 Control stop or lock-out . . . 49
4.4 Error code memory . . . 49
4.4.1 Error read outs . . . 50
4.4.2 Deleting errors . . . 50

5 SERVICE PARTS . . . 51
5.1 General . . . 51

6 EC DECLARATION . . . 54

7 REGULATIONS . . . 55
7.1 EC regulations . . . 55
7.2 Remeha factory test . . . 55
7.3 Additional guidelines . . . 55

8 TECHNICAL SPECIFICATIONS and working principle . . . 56
8.1 Technical data . . . 56
8.2 The boiler components . . . 57
8.3 Working principle . . . 57
8.3.1 Regulating . . . 57
8.3.2 Advanced boiler control (‘abc®’-control) . . . 58
8.3.3 Regulating the water temperature . . . 58
8.3.4 Low flow / water protection . . . 58
8.3.5 High Limit temperature protection . . . 58

9 EFFICIENCY DATA AND GAS EFFICIENCY LABELS . . . 59
9.1 Annual efficiency . . . 59
9.2 Water-side efficiency . . . 59

INTRODUCTION

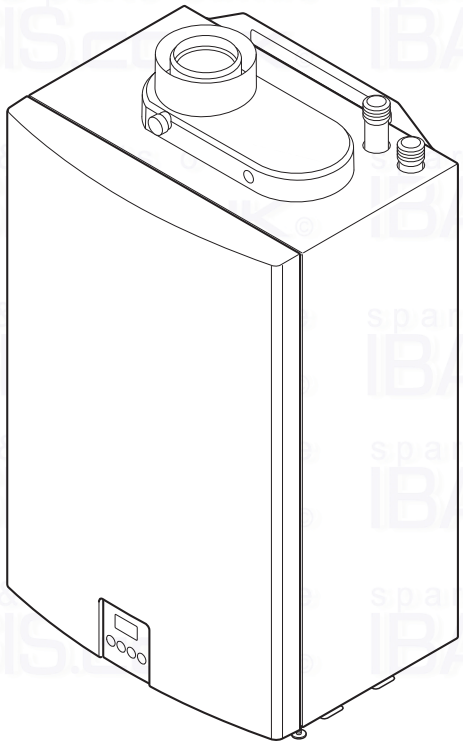

fig. 01 Remeha Avanta

59970LTGBW7H046

The Remeha Avanta is a series of wall mounted high-efficiency fully condensing central heating boilers, for open vented systems

These technical instructions contain useful and important information for the correct installation, operation and maintenance of the Remeha Avanta boiler.

Read these instructions carefully before putting the boiler into operation, familiarise yourself with their control functions and operation, strictly observing the instructions given. Failure to do so may invalidate warranty or prevent the boiler from operating correctly.

The installation, commissioning, Inspection and servicing of the boiler must be carried out by a competent registered Engineer who holds valid ACS certification and in accordance with current gas safety (installation and use) regulations, the building regulations and all other relevant codes of practice.
All electrical work must be carried out by a competent Engineer and to be installed in accordance with the current IEE regulations.

On commissioning the certificate in the Benchmark Checklist within the Installation + Service manual must be completed and left on site with a copy send on to Broag Ltd for registration purposes.

If you have any questions, require an engineer to call on site, or if you need more information about specific subjects relating to this boiler, or it's installation please do not hesitate to contact our technical help line 0118 978 3434.

When contacting Broag with a problem on the boiler please have available the boiler type, Serial No (located on the bottom of the casing), and the symptoms or fault code (the fault code is a series of flashing red digits in the display panel).

The data published in these technical instructions is based on the latest information (at date of publication) and may be subject to revisions.
We reserve the right to continuous development in both design and manufacture, therefore any changes to the materials or technology employed may not be retrospective nor may we be obliged to adjust earlier supplies accordingly.

1 SAFETY

1.1 General safety

The following pictograms are used in this Installation and Service manual to specifically draw certain points to your attention:

Tip		Useful tip or practical advice.
Indication		Important instruction in carrying out a particular operation.
Warning		Possible danger of personal injury or material damage to the regulator, building or environment.
Danger		Serious personal injury can occur because of risk of electric shocks.

1.2 Safety during assembly and installation

Observe the appropriate safety measures, as given in these instructions.

Can you smell gas? What to do:
- do not smoke and do not create any flame or sparks;
- do not use any electric switches;
- turn off the gas tap;
- open windows and doors;
- trace possible leaks and seal them.

Warning! If the leak is before the gas meter, alert your gas supplier, TRANSCO, tel. 0800 111 999.

Can you smell smoke or flue gasses? What to do:
- isolate power supply
- open windows and doors
- trace possible leaks and seal them.

1.3 Safety during installation, inspection and maintenance

Under the Gas Safety (Installation & Use) Regulations 1998, the Remeha Avanta, in common with all gas appliances, must be installed by a competent person in accordance with that regulation.
Statutory regulations, in any country, cannot be overridden by any of the notes or instructions from the manufacturer.
Compliance with National Standards does not provide any degree of immunity from legal obligations. In the UK, the installation must be in accordance with the national and local norms and requirements.

For any issues or circumstances not addressed within these instructions, please call our After Sales Department 0118 9743070

Remeha Avanta 12v - PIN: 0063BQ3009
Remeha Avanta 18v - PIN: 0063BQ3009
Remeha Avanta 24v - PIN: 0063BQ3009
Gas Council numbers:
Remeha Avanta 12v: 41-288-09
Remeha Avanta 18v: 41-288-06
Remeha Avanta 24v: 41-288-10

Classification type for evacuation of the combustion products; according EN 483: *see par. 8.1.*

Health and safety information

- The Avanta system is below the maximum lift weight for one person, however please ensure all necessary care is taken when lifting the boiler on to the wall mounting bracket.
- All sealants and gaskets are free from harmful products. On first firing the boiler, a smell of these products may be present and should cease after a short period.

2 INSTALLATION

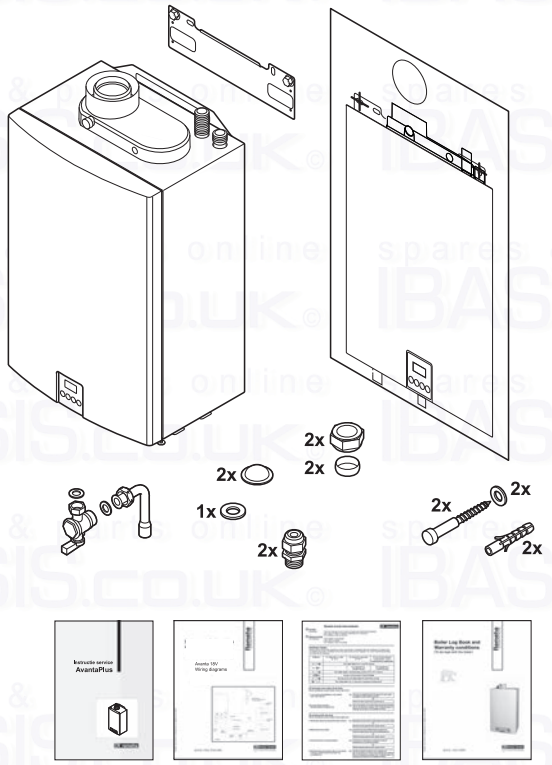

fig. 02 Scope of delivery

59970.LT.GB.W7H.006

2.1 Scope of delivery

The standard delivery of the Remeha Avanta boiler includes:

- Boiler + mounting bracket
- Installation and Service manual, Quick reference card and Mounting Template
- Warranty Leaflet (The terms and conditions of the warranty are included in the warranty leaflet, on installation of the boiler please fill in the registration card and return to Broag-Remeha)
- Wiring diagrams
- Gas cock with gasket + 90° gas pipe (22 mm)
- nylon plugs and screws for fixing mounting plate
- olives and nuts
- spacers
- cable glands;

This Installation and Service manual deals with the standard supplied boiler only. For the installation or assembly of any optional accessories supplied with the boiler, such as stand off frame, pipe work kits, cover plate, control kits, etc, please refer to the Assembly Instructions supplied with these accessories.

2.2 Mounting the boiler

Packed in the box with the Remeha Avanta box is this Installation and Service manual. Read instructions and remarks carefully. This section includes the guidelines and instructions for the connection of gas, water, electricity, safety devices, the regulator, control unit, flue discharge and air supply.

2.2.1 Installation / maintenance clearance requirements

The gas connection is located on the bottom of the boiler whilst the water connections, air inlet and flue gas outlet are located on the top of the boiler. The boiler is supplied as standard with gas pipe work tails.
For installation, servicing and inspection min. 600 mm in front of the boiler is required. If this free space is obtained by opening a door or removing a panel, the boiler may be installed for instance in a closed cupboard. All servicing / inspection / repairs are made from the front of the boiler.
For ease of installation we recommend clearances of 0.5 cm at the side so that the unit is easy to open, with a free space of 25 cm under the appliance and 25 cm above the appliance, as the minimum requirement.
However once installed, it is possible to reduce these clearances to 22 cm at the top, and 25 cm at the bottom provided the boiler front panel can be removed and the isolating valves are easily accessible without the use of tools”

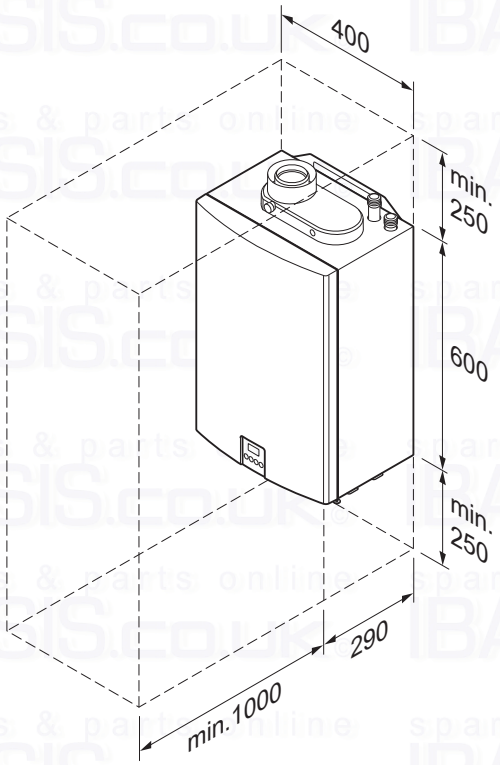

fig. 03 Clearance requirements

59970LTGBW7H047

Clearances shown are for ease of installation – once fitted it is possible to enclose the boiler in a cupboard with 25mm clearances around the casing provided a door is included to allow the front cover to be removed completely for maintenance and allowance is made to access the gas valve and flow / return connections.

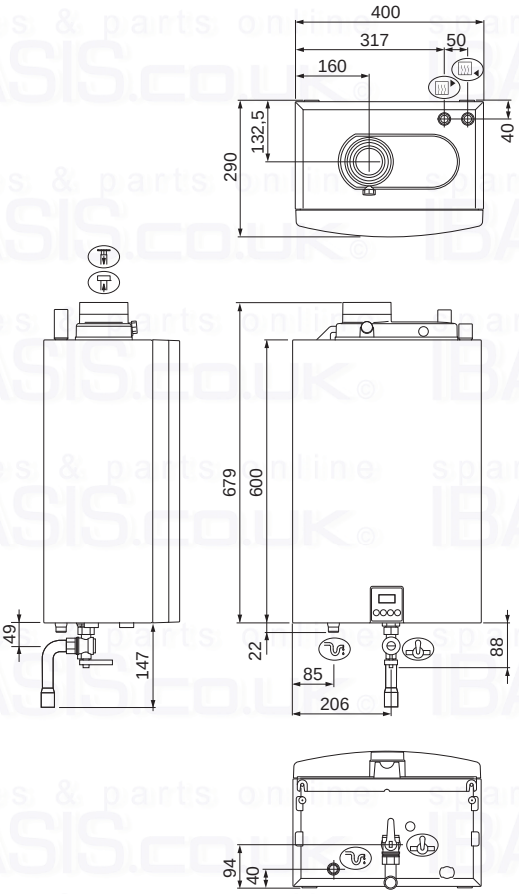

fig. 04 Dimensions and connection points of the Remeha Avanta

59970.LT.GB.W7H.001

2.2.2 Dimensions and connection points.

- *Return connection Ø 22 mm*
- *Flow connection Ø 22 mm*
- *Gas connection Ø 22 mm*
- *Combustion air inlet Ø 100 mm (concentric)*
- *Flue duct Ø 60 mm (concentric)*
- *Condensate drain connection ¾" (standard overflow pipe size)*

- Based on the guidelines and the required installation space, determine where to mount the Remeha Avanta.
- In determining the boiler position, consider carefully the flue outlet position and any pluming consequences.

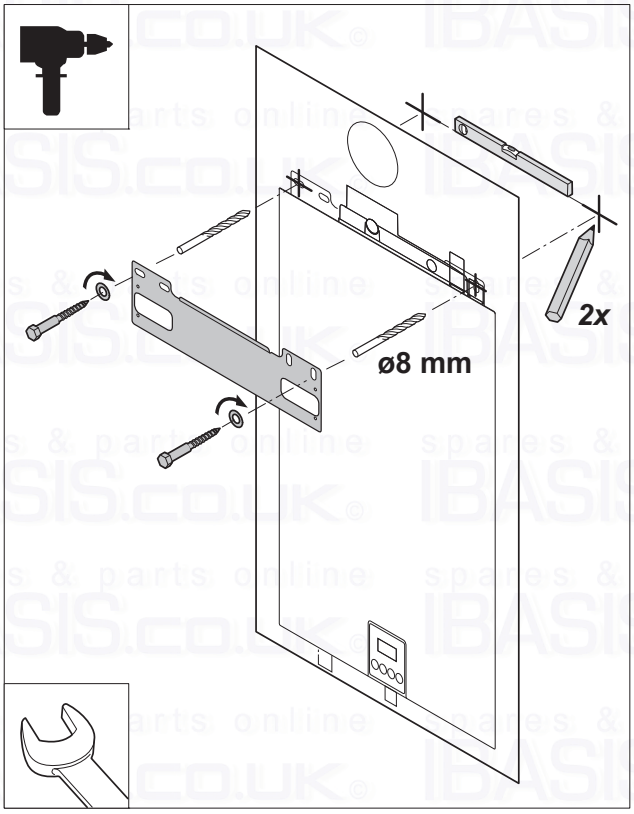

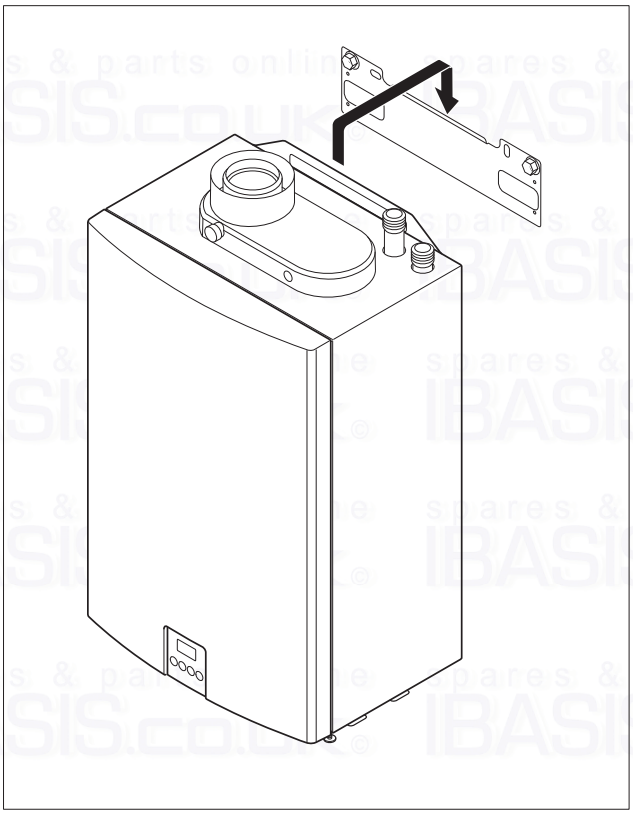

fig. 05 Mounting the Avanta

59970.LT.GB.W7H.002

2.2.3 Mounting the Remeha Avanta

- Remove template from the box.
- Using the template determine and mark the position of the mounting bracket and flue outlet.
- Drill the (Ø 8 mm) holes.
- Fit the (Ø 8 mm) plugs.
- Core drill the (Ø 125 mm) hole for the flue outlet
- Fit (Ø 6 mm) screws into the plugs.
- Remove boiler from the box and mount on bracket.

⚠

- The boiler should be mounted on a suitable vertical wall which is able to support the weight of the boiler.
- The boiler should be mounted in a room which, even during severe cold weather, remains frost-free**,** or frost protection controls MUST be fitted.
- If the boiler is to be installed in a timber framed building, please refer to British Gas publication: 'Guide for Gas Installations in Timber frame Housing', reference DM2.

☞

- Make sure the boiler and any open connections are protected from building etc. dust during the installation.
- There must be a 3 amp fused switched spur within 1 m of the boiler.
- Provision must be made for the condensate discharge.

2.3 Water-side connections

2.3.1 Water flow

The central heating system should not require a bypass, unless all radiators are fitted with TRV's or when the system controls could allow the boiler and pump to operate when there is no flow. Where a bypass has to be fitted, the bypass must be placed at least 1.5 metres away from the boiler.
The '**abc**®' control also monitors the temperature difference across the flow and return connections and the rate of temperature rise and will automatically regulate the boiler output to ensure that it remains operational for as long as possible without the need to 'lock out' requiring a manual reset.

2.3.2 System Pump

The system pump must be wired directly to the boiler terminal strip and be capable of providing the nominal flow at design conditions against the combined resistance of the boiler and system.

The minimum flow rate is 1.05 m^3/h (0.29 l/s) at full load and 15°C differential across flow and return. To operate at ΔT = 11°C the flow rate must be 1.37 m^3/h (0.38 l/s)
Higher resistance systems may require a higher duty pump.

The maximum power consumption of the pump may not exceed 150 W /1.5 amps.
The connection of the pump is described in *par. 2.8*

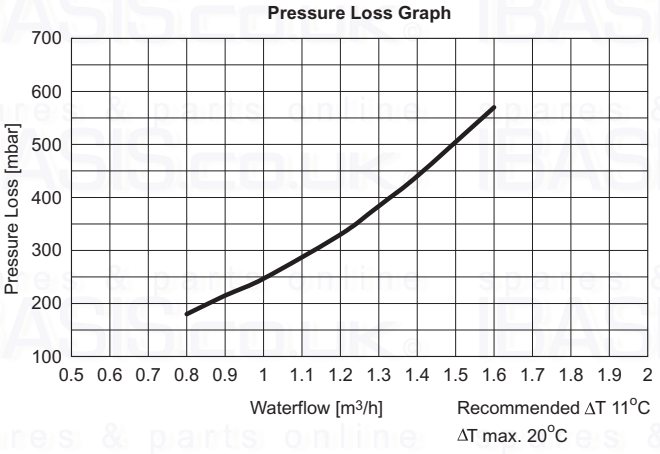

fig. 06 Pressure loss graph

59970.LT.GB.W7H.003

2.3.3 Pressure loss of the boiler

2.3.4 Open-Vented System

The feed and expansion tank must be situated at a minimum height of 1 metre and a maximum height of 30 metres above the boiler to provide the correct operating head pressure.
The cold feed must be at least 15 mm and the open vent must be at least 22 mm. The pipes must rise continuously from the system. The heating vent must be at least 450 mm above the water level in the feed and expansion cistern.
The pump should be fitted on the flow pipe from the boiler and have isolating valves each side.

2.3.5 Sealed systems

If the Avanta is installed on a sealed system, an appropriately sized expansion vessel and a safety valve MUST be installed close to the inlet side of the pump. A mains filling loop MUST be installed close to the outlet side of the system pump, along with automatic air vents positioned in the system pipe work to ensure adequate system venting during filling and operation.
An adequate pressure gauge should be fitted in a position where it can be seen during filling of the system.
All in accordance with the current issue of the relevant British Standards.

2.3.6 Additional guidelines for the domestic and CH water

- Flush the pipes and radiators thoroughly before connecting the boiler to the central heating system in accordance with BS 7593 (1992).

⚠

- The temperature of the central heating pipes and the radiators can rise to 95°C.
- Use untreated tap water only to fill the CH system.
- The pH value of the system water must be between 6 and 9
- In case inhibitors are being used, please follow the instructions given in, *see par. 2.3.7.*

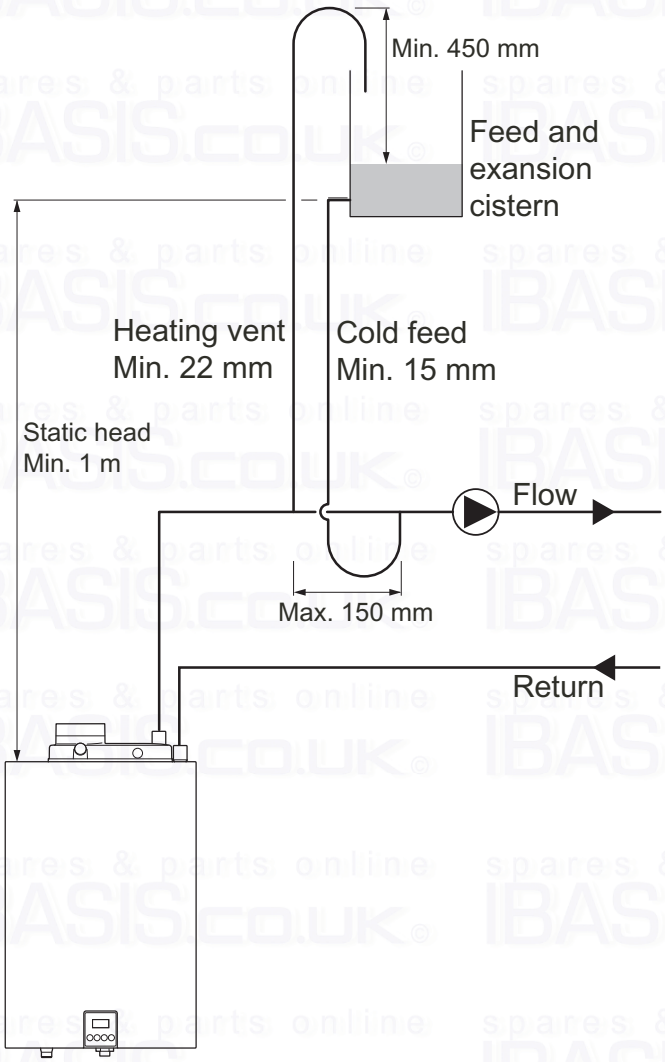

fig. 07 Open-Vented system

59970.LT.GB.W7H.004

2.3.7 *Water treatment*

If used correctly water treatment can improve the boilers efficiency and increase the anticipated life expectancy of the boiler. For further information a special document “Quality requirements CH water” is available from Broag.

As most systems contain a variety of metals, it is considered good practice to provide some form of water treatment in order to prevent or reduce the following:

- Metallic corrosion
- Formation of scale and sludge
- Microbiological contamination
- Chemical changes in the untreated system water

⚠
All scale deposits however small will reduce the efficiency of the boiler and should be prevented.

Suitable chemicals and their use should be discussed with a specialist water treatment company prior to carrying out any work (environmental aspects, health aspects). The specification of the system and manufacturers recommendations must be taken into account, along with the age and condition of the system. New systems should be flushed thoroughly to BS 7593(1992) to remove all traces of flux, debris, grease and metal swarf generated during installation. Care to be taken with old systems to ensure any black metallic iron oxide sludge and other corrosive residues are removed, again by power flushing, ensuring that the system is drained completely from all low points.

☞
Please ensure that the new boiler plant is not in circuit when the flushing takes place, especially if cleansing chemicals are used to assist the process.

It is important to check the inhibitor concentration after installation, system modifications, filling the system and every service in accordance with these instructions.

For the correct dosage and the suitability of inhibitors for use with our boilers and for further information on water treatment or system cleaning we advise direct contact with either of the following companies:

‘F1®’ manufactured by:	or: **Sentinal ‘X100®’** manufactured by:
Fernox, Cookson Electronics	Sentinel Performance Solutions
Forsyth Road	The Heath Business & Technical Park
Sheerwater	Runcorn
Woking	Cheshire,
Surrey GU21 5RZ	WA7 4QX
Tel No: 01483 793200	Tel No: 0800 389 4670
Fax No: 01483 793201	Fax No: 0800 389 4677
Email: admin@fernox.com	Email: info.uk@sentinel-solutions.net
Web site: www.fernox.com	Web site: www.sentinel-solutions.net

2.3.8 Safety valve discharge

A pressure relief safety valve is not needed for Open-Vented systems.

2.3.9 Draining Provision

Drain points must be provided at all the low points of the system to ensure that the entire system can be completely drained. The boiler is provided with a drain in the return pipe.

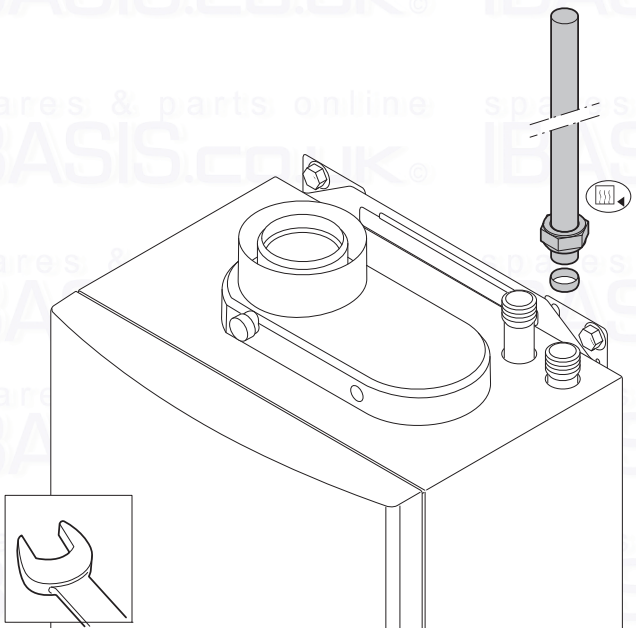

fig. 08 Connecting CH return

59970.LT.GB.W7H.005

2.3.10 Connecting the 'CH return'

- Remove the dust cap from the 'CH return' connection at the top of the boiler.
- Fit the return pipe to 22 mm Ø compression fitting.

2.3.11 Connecting 'CH flow'

- Remove the dust cap from the 'CH flow' connection at the top of the boiler.
- Fit the flow pipe to the 22 mm Ø compression fitting.

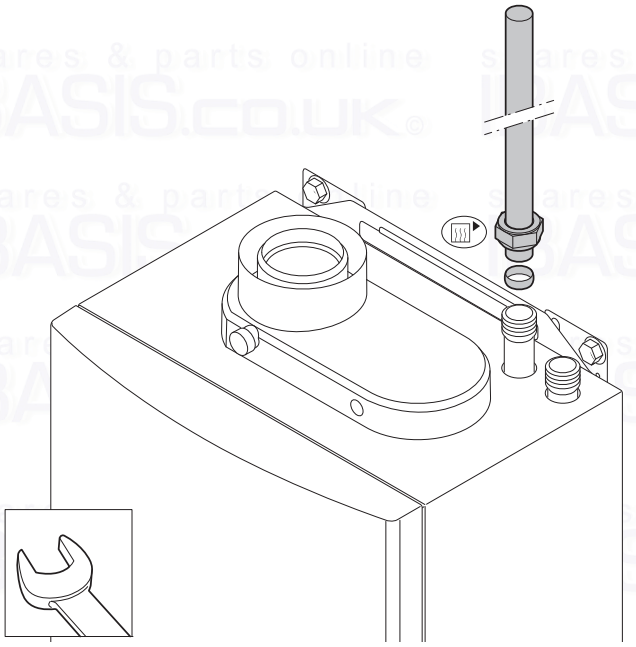

fig. 09 Connecting CH flow

59970.LT.GB.W7H.007

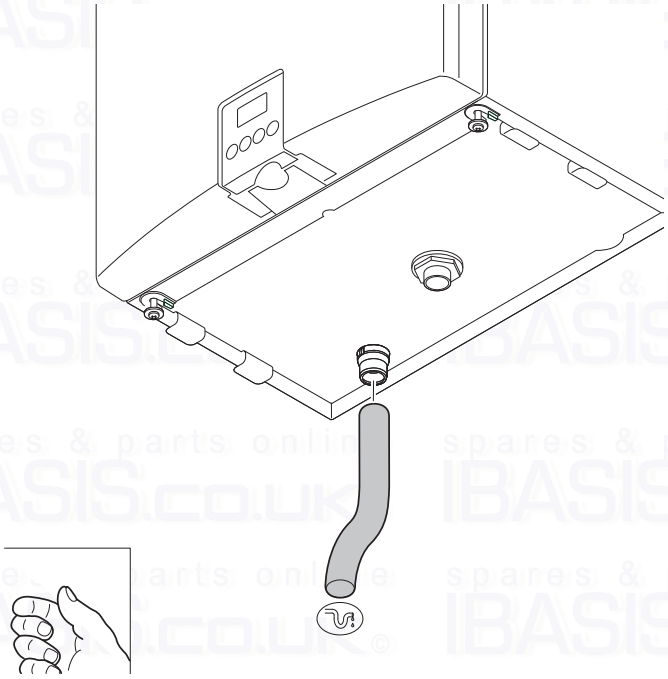

fig. 10 Connecting condensate drain

59970.LT.GB.W7H.034

2.3.12 Connecting condensate drain

- Connect the condensate drain outlet to a suitable waste water drain point using acid resisting pipe work (i.e. - ¾" overflow). To enable the siphon in the boiler to be removed / serviced, the connection should not be a permanent one (i.e. "push fit" system or a "tundish" immediately below the boiler).
- To prevent the risk of freezing connect the condensate into an internal vertical soil pipe using a tundish (air break) c/w a min 75 mm water seal trap.
- If the condensate pipe has to run externally make sure this is done by realizing the shortest possible route, and increase the diameter to at least 1¼" or insulate it with weather resistant insulation.
- The drain should slope at least 3 cm per meter, with a maximum horizontal length of 5 m.

- If connecting into an internal discharge branch (i.e. sink waste etc) the connection must be down stream of the existing waste trap.
- Fill the boiler siphon with water before operation, to prevent flue gasses discharging into the room.
- The condensate drain must be connected in accordance with current regulations.

2.4 Gas-side connections

2.4.1 Additional guidelines for gas connections

Before installation, check that the gas meter has sufficient capacity for the demand. Remember to consider the consumption of all household appliances.

2.4.2 Adjusting boiler to other gas-type

The Avanta boiler is suitable for both natural gas and propane firing. For propane a kit with restrictor is required.
The boiler is supplied as standard set for natural gas (G20), therefore the following procedure must be carried out BEFORE the boilers are fired and commissioned for the first time on propane:
Fit restrictor (not included with boiler)
Adjust the fan speed (*see par. 2.10.8*) and
Adjust the gas/air ratio (*see par. 2.10.3*).

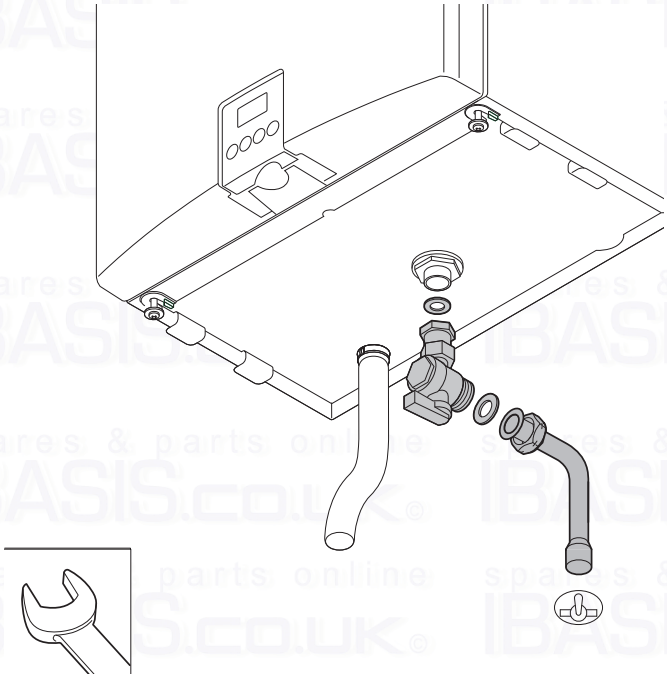

fig. 11 Connecting gas supply

59970.LT.GB.W7H.035

2.4.3 Connecting the gas supply

- Before starting any work on the gas supply, turn off the main isolation valve.
- Remove the dust cap from the gas connection at the bottom of the boiler.
- Connect the gas supply to the 22 mm Ø connection (copper tail supplied).

- Make sure there is no dirt in the gas pipe.
- Make sure that there is sufficient gas pressure available (at full load > 17 mbar).
- Preferably install a gas filter in the gas pipe to protect the boiler.
- The gas supply must be connected, tested for soundness and purged by a qualified Engineer and in accordance with BS6891.

2.5 Flue terminal and air supply connections

The Remeha Avanta is only suitable for room sealed operation with a standard concentric connection 60/100 mm Ø or the optional 80/125 mm Ø connection.
Detailed recommendations for air supply and flue terminals are given in BS 5440.

It should not be necessary to provide compartment ventilation when the boiler is used with a standard concentric flue.

2.5.1 Flue terminal positions

The flue terminal must be located with care to ensure that the products of combustion are dispersed properly in all weather conditions and cause minimum nuisance to the building user or any adjacent buildings. If the terminal is positioned less than 2 m above the ground, balcony, or flat roof where access by persons is possible a suitable guard must be employed.

The boiler will produce a water vapour plume during normal operation Positions for the Remeha Avanta are shown in the figure and *table 01. The principle of the 1:1 gas valve ensures the Avanta range is able to deliver it's full output at inlet pressure down to 17 mbar. However if dynamic pressure below 19 mbar are experienced ensure this is adequate for ALL other gas appliances in the property.*

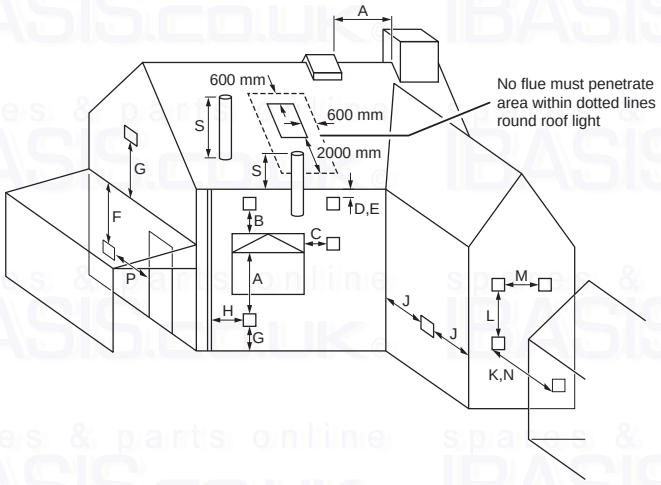

fig. 12 Flue terminal positions

Dimensions	Terminal location	Minimum distance (in mm) to terminal (room sealed)
A	Directly below an opening, air brick, opening window, etc.	300
B	Above an opening, air brick, opening window, etc.	300
C	Horizontally to an opening, air brick, opening window, etc.	300
D	Below a gutter or sanitary pipe work	75
E	Below the eaves	200
F	Below a balcony or carport roof	200
G	Above ground, roof or balcony level	300
H	From vertical drain/soil pipe work	150
J	From an internal or external corner	300
K	From a surface or boundary facing the terminal	1500
L	Vertically from a terminal on same wall	1500
M	Horizontally from a terminal on same wall	300
N	From a terminal facing the terminal	1200
P	From an opening in a carport (e.g. door, window) into the building	1200
R	From a vertical structure on the roof	n/a
S	Above an intersection with the roof	300

table 01 Minimum distances to terminal

2.5.2 Room sealed flue

See *table 02* for the maximum pipe length of flue ducts and air supply pipes for this 'room sealed' application.
It is not necessary to provide combustion air to the room or internal space in which the boiler is installed.

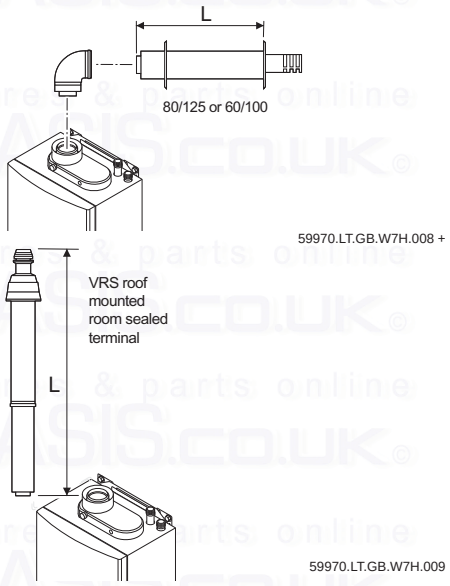

	M&G material	
Diameter in mm Ø	**60/100**	**80/125**
Maximum length 'L' allowed [m]	8	34
Eq. Length of 90° elbow LT W6H 000 031	1.4	
Eq. Length of 45° elbow LT W6H 000 032	0.65	

table 02 Maximum pipe lengths for flue duct and air supply in room sealed application

For flue installations not covered by this booklet, please contact our technical help line 0118 978 3434.

2.5.3 Connecting the flue terminal and air supply

- Check the depth of the wall and cut the terminal to suit – taking note of the cutting instructions supplied with it
- Core drill a 125mm Ø hole in the wall, fit the rubber closure plate at the exit end and slide the terminal through the wall until the closure plate is clear of the outer edge of the wall – pull back the terminal till the closure plate is flush then fit inner wall closure to secure.

- All connections must be airtight and waterproof.
- Horizontal extension sections should slope towards the boiler (at least 3 cm per metre).

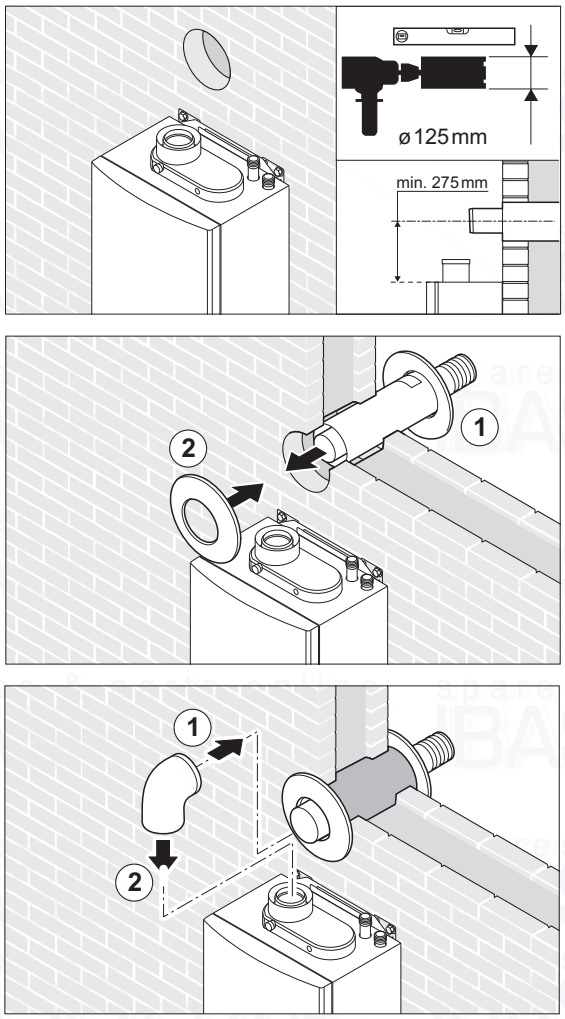

fig. 13 Connecting flue terminal and air supply

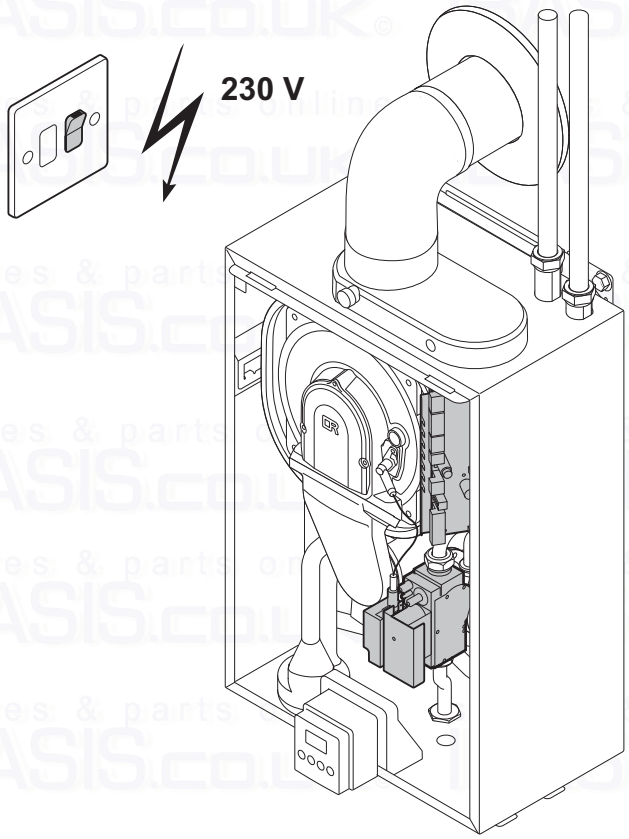

fig. 14 Electrical components with live 230 V

59970LTGBW7H011

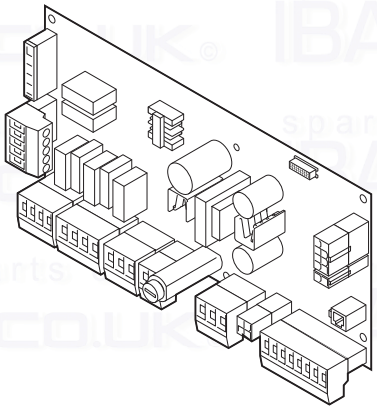

fig. 15 The control unit

LTALW7H000023

2.6 Electrical connection

- Connect the boiler to the fused (3 amp) switch spur unit adjacent to the boiler.
- The switch unit must always be accessible.

When the switch spur is on the following components of this appliance can be live (230 V):

- electrical connection gas combination block;
- most parts of the control unit;
- ignition transformer;
- X1, X2, X4, X5, X6 and X7 terminal strip;
- 230 V supply cable connection.

2.6.1 The control unit

The Remeha Avanta has an electronic regulation and control unit with an integrated ionisation flame detector. The heart of the boiler control unit is a microprocessor, the **'abc®'**, which controls and protects the boiler.

The maximum rated input of the boiler is 150 W. The boiler is fully pre-wired internally, all external connections can be made using the terminal strips X5 - X7 - X9 and 230 V input (X2 terminal). See the diagram for the position of the connectors and fuse (F2) on the control unit.
The most important properties of the control unit are summarized in *table 03.*

Manufacturer	Sit Controls
Supply voltage	230 V – 1ph – 50 Hz
Pre-purge time	3 s
Post-purge time	5 s
Ignition time	2.5 s
Safety time	5 s
Anti-cycling time	3 till 10 min.
Fuse value F1 (230 V)	2 AT
DC fan	24 VDC

table 03 Control unit characteristics

Any loads other than those specified above are only allowed if an isolating transformer is used.

The output of the Remeha Avanta can be controlled in the following ways:

On/off control – volt free switching - The boilers internal control will modulate the output to achieve the flow temperature set point of the boiler. This contact is on the X9 terminal strip (low voltage only).

On/off control – 230 V switching - The boilers internal control will modulate the output to achieve the flow temperature set point of the boiler. This contact is on the X2 terminal strip (230 VAC only).

Modulated control – Open Therm - The external controls will modulate the boiler's output to achieve the flow temperature determined by the modulating regulator. This contact is on the X9 terminal strip (low voltage only).

Modulated control – Open Therm in combination with an externally mounted simple 230 V switching time clock - The boiler will provide room compensated heating and time control over CH and DHW (System boiler).

- All connections on terminal X1, X2, X4, X5, X6 and X7 are 230 VAC.
- All connections on terminal X9 are low voltage only.

2.7 Connecting external controls

- Release the two screws at the bottom of the front casing, release plastic clip below display and remove the front casing.
- Remove one of the supplied grommets in the base of the boiler, fit a cable gland and feed the cables through.
- Connect the cables to the relevant connectors, as shown in the diagrams.

- Isolate power supply at the fused spur before carrying out any work on the boiler controls.

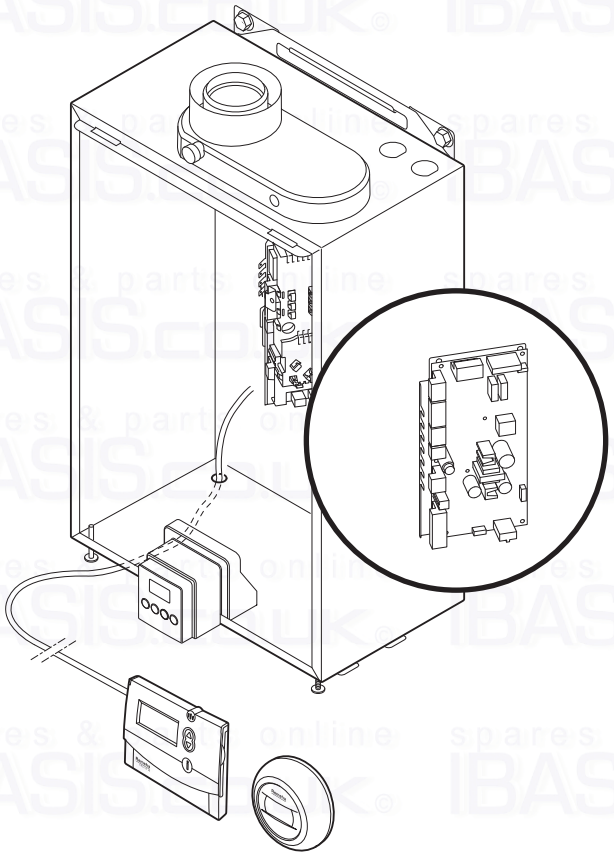

fig. 16 Connecting external controls

59970LTGBW7H012

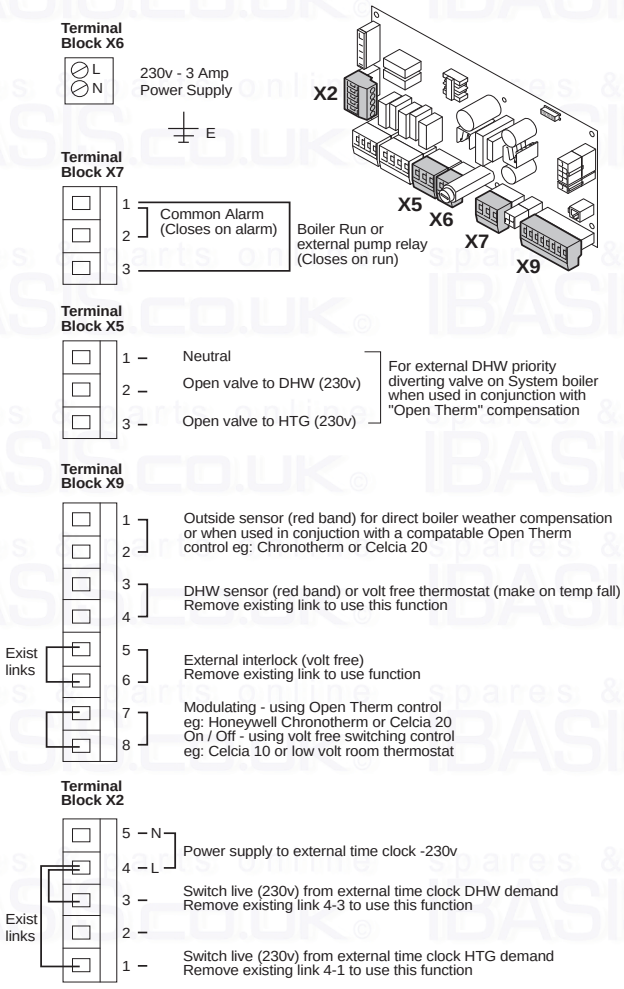

fig. 17 Boiler External Connection terminal details

LT.AL.W7H.000.025

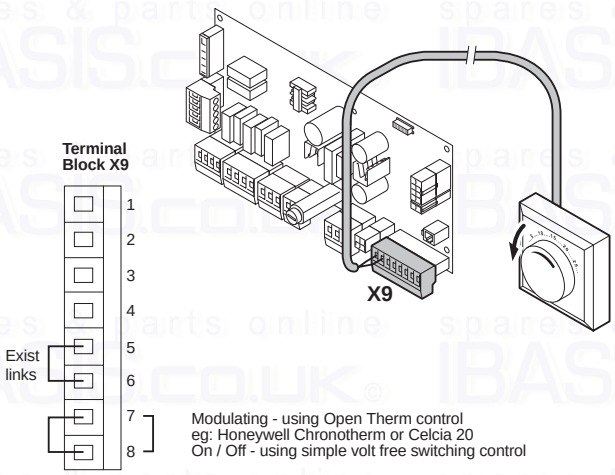

fig. 18 Wiring diagram on/off control

LT.AL.W7H.000.026

2.7.1 Connecting an on/off control – room temperature (volt free switching)

The Remeha Avanta can be connected to a 2-wire on/off thermostat, such as the Remeha Celcia 10.
Mount the thermostat in a reference room (usually the living room).

- Remove existing link and connect the 2-wire 24 V room thermostat to connectors 7 and 8 of the X9 terminal strip.

☞ If a room thermostat with an anticipation resistor is being used, parameter P5 should be changed from 0 to 1, *see par. 2.10.8.*

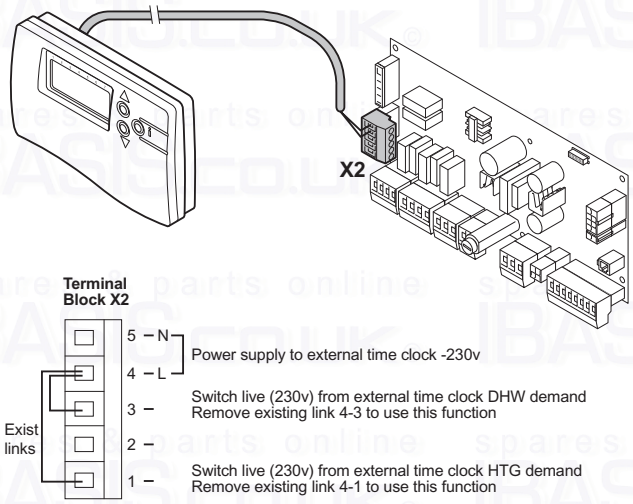

fig. 19 Wiring diagram for an external 230 V time clock

LTALW7H000027

2.7.2 Connecting a time control using an external 230 V clock

When the switch spur is on, the terminal strip X2 will be live (230 V).

- A 230 V two channel time clock for CH and DHW control can be connected to the Remeha Avanta.
  Live 230 V supply for the time clock - connect to connectors 4 (L) and 5 (N) on X2 terminal strip.
- For CH - remove exist link between connectors 4 and 1 of the X2 terminal strip and connect the 230 V output from the time clock to terminal 1 on the terminal strip X2.
- For DHW - remove exist link between connectors 4 and 3 of the X2 terminal strip and connect the 230 V output from the time clock to terminal 3 on the terminal strip X2.

For this option to function correctly, a link or room control must be fitted between connectors 7 and 8 of X9 terminal strip (remove existing link before use).
If the 230 V supply for the external time clock is not taken from the boiler – terminal block X2 connections 4 & 5, it must be taken from the same phase as the boiler 230 V supply and correct polarities observed.

2.7.3 Connecting a 230 V time clock in combination with a modulating room control

With an externally mounted simple 230 V switching time clock connected to connectors on X2 terminal strip and a Celcia 15 connected to connectors 7 and 8 of X9 terminal strip (remove existing link), the Remeha Avanta will provide room compensated heating and time control over CH and DHW.

An OpenTherm® room modulating control (Celcia 15) used in conjunction with a simple external 230 V time clock will provide easy to set up and operate - timed room compensation heating

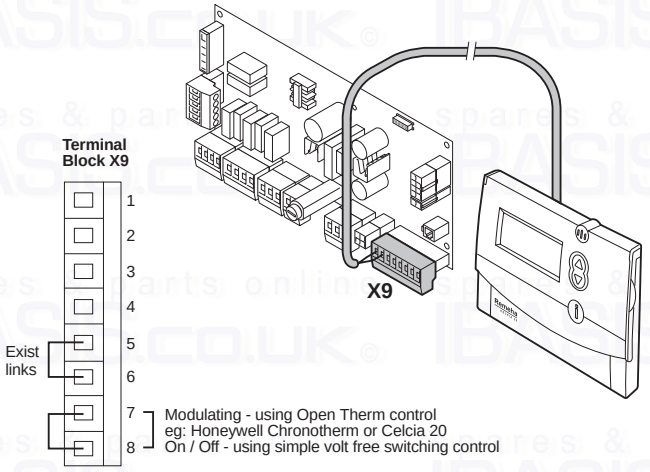

fig. 20 Wiring diagram modulating regulator

LTALW7H000028

2.7.4 Connecting a modulating control – room or outside compensation

The Remeha Avanta has an OpenTherm® interface. This enables our modulating range of OpenTherm® room controls (e.g. the Remeha Celcia 15 or 20) to be connected without any further modifications.

- Mount the control in a reference room (usually the living room).
- Remove existing link and connect the two-wire interface cables to connectors 7 and 8 of the X9 terminal strip.
- When using the Celcia 20 it is possible to add an outside sensor to provide weather compensation with room adjustment. Connect the outside sensor to connectors 1 and 2 on the X9 terminal strip.

If the DHW water temperature on the OpenTherm® control can be adjusted, then the Remeha Avanta will supply water at the temperature determined at the OpenTherm® with the maximum being set in the boiler.
OpenTherm® is an industry standard modulating control available from several control manufacturers.

The Remeha Avanta can therefore be controlled directly by any other controls with this OpenTherm® logo

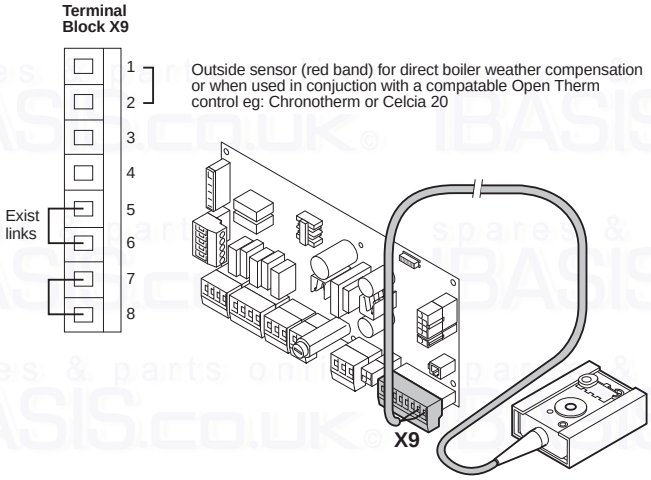

fig. 21 Wiring diagram outside temperature sensor

LTALW7H000029

2.7.5 Connecting an outside temperature sensor

An outside temperature sensor can be connected to connectors 1 and 2 of the X9 terminal strip.
The boiler will regulate the output using the set point of the internal heat curve.
This can be set as follows:

- Outside temperature minimum set point = -15°C (adjustable with parameter P29 to between 0 and -30°C)
- Outside temperature maximum set point = 20°C (adjustable with parameter P28 to between 0 and 40°C)
- Flow temperature set point at maximum outside temperature = 20°C (adjustable with parameter P27 to between 0 and 60°C)
- Flow temperature set point at minimum outside temperature = 20°C (adjustable with parameter P1 to between 20 and 85°C)

An outside sensor used in conjunction with a simple 230 V time clock will provide easy to set up and operate - timed weather compensation heating based on the above graph.

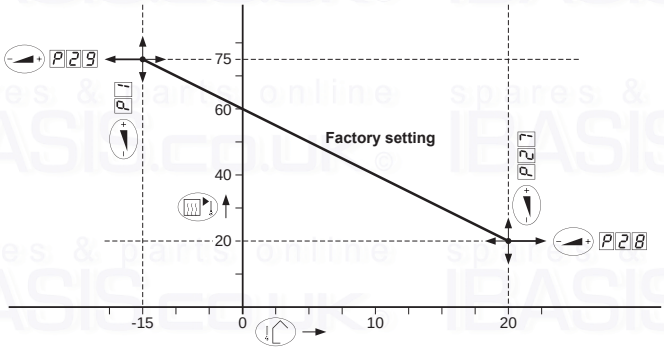

fig. 22 Heat curve Remeha Avanta

LTALW7H000030

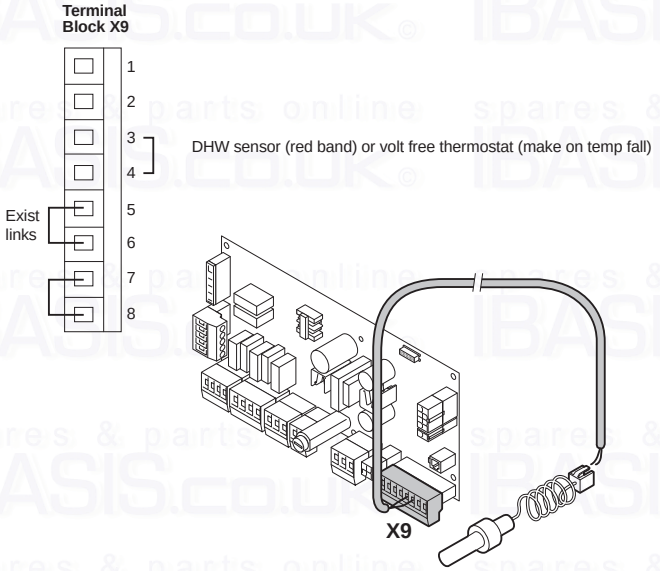

fig. 23 Wiring diagram DHW calorifier sensor or thermostat

LTALW7H000031

2.7.6 Connecting the DHW sensor/thermostat

- If an external DHW calorifier is being used with the Avanta system boiler a DHW control sensor or volt-free thermostat can be connected to connectors 3 and 4 of the X9 terminal strip. The control will automatically detect whether a sensor or a thermostat has been connected.

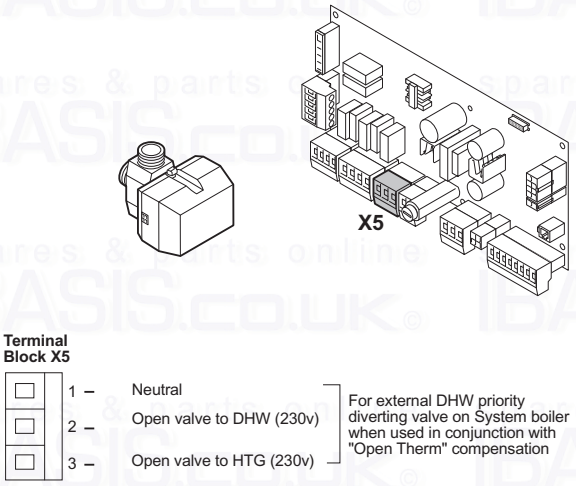

fig. 24 Wiring diagram three-way valve

59970LTGBW7H041

2.7.7 Connecting a three-way valve

If required a 230 V DIVERTING three-way valve can be connected to terminal X5 of the control unit. When used in conjunction with an “Open Therm” compensator the DHW-production operates with priority.
Connector X5-1 for N (neutral), connector X5-2 for ”open valve to DHW” (port A of three-way valve) and connector X5-3 for “ open valve to CH (port B of three-way valve)

If port A is connected to heating and port B to hot water X5-3 should be used to enable DHW.

The cable must be fed through the boiler’s casing by means of the supplied cable gland and run trough the cable clamp on the right-hand inside of the boiler.

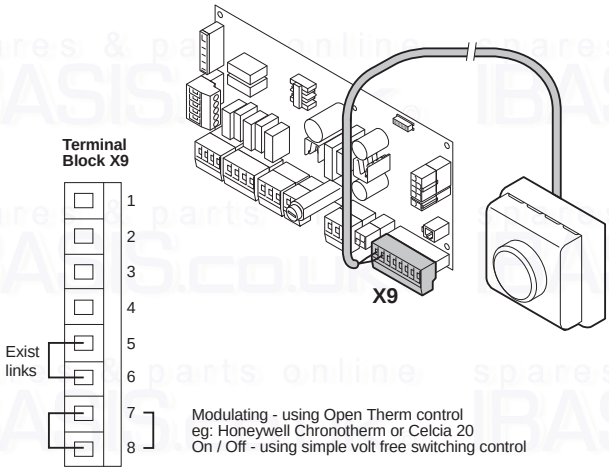

fig. 25 Wiring diagram for frost thermostat

LTALW7H000032

2.7.8 Connecting a frost thermostat

The boiler must be installed in a frost-free area to prevent the condensate drain from freezing. However if the temperature of the CH water in the boiler drops too low, the integrated boiler protection device is activated as follows:

- at a water temperature below 7°C: the circulation pump is switched on;
- at a water temperature below 3°C: the boiler is switched on;
- when the water temperature is above 10°C: the boiler is switched off and the circulation pump runs for another 15 minutes.

If a 230 V switching time clock is connected to terminal strip X2, the frost thermostat wired as indicated (on connectors 7 and 8 of the X9 terminal strip) it will not bring the boiler on if the time clock is in the OFF position. In these cases the frost stat must be connected in parallel with the time clock on connectors 1 and 4 of the X2 terminal strip (frost stat contacts to close on temperature fall).

- A frost thermostat should preferably be installed in rooms with a high frost risk.
- Connect the frost thermostat in parallel to the room thermostat
- connectors 7 and 8 of the X9 terminal strip (remove existing link between connectors 7 and 8 before use).

- The integrated boiler protection described above will not provide complete system or fabric protection.
- When a Celcia 20 control has been fitted to connectors 7 and 8 on X9 (*see par. 2.7.4*) an outside sensor as detailed *in par. 2.7.5*) must be used to provide system and building fabric frost protection.
- If a frost thermostat is connected parallel to the Celcia on connectors 7 and 8 on X9, when the frost thermostat calls for heat (contact closed) it will override the Celcia 20 control and cause an error message (OT ERROR) flashes in the display and the boiler will operate continuously to achieve the flow set point.

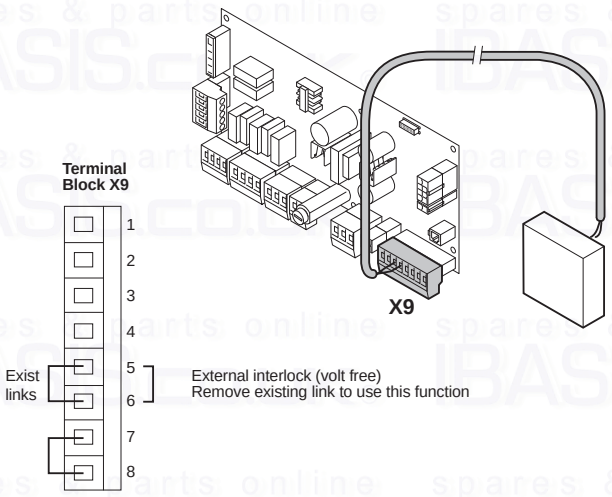

fig. 26 Wiring diagram for an external interlock

LTALW7H000033

2.7.9 *Connecting an external interlock*

The Remeha Avanta is supplied with an external interlock function. A volt free switching device (i.e. external gas pressure switch, safety thermostat for under floor heating) can be connected to connectors 5 and 6 of the X9 terminal strip after removing the existing link. When this circuit is open the boiler will shut down with the display showing (code 9) and will restart when the circuit is closed.

2.7.10 *Connecting remote alarm and boiler run indication*

As standard the boiler is supplied with 3 volt free connectors on terminal X7. They can be used for an external gas valve, remote alarm and boiler run indication.

- Common alarm signal connect to connectors 1 and 2 on terminal X7. Contact closes on lock out. For this purpose set parameter 24 from 0 to 1.
- Boiler run signal connect to connectors 1 and 3 on terminal X7. Contact closes on heat demand. For this purpose set parameter 24 from 0 to 2.
- Connect an external gas valve to connectors 1 and 3 on terminal X7. Contact closes when the gas valve is activated. For this purpose set parameter 24 from 0 to 3.
- Connect an external pump relay* to connectors 1 and 3 on terminal X7. Contact closes on heat demand. For this purpose set parameter 24 from 0 to 4.

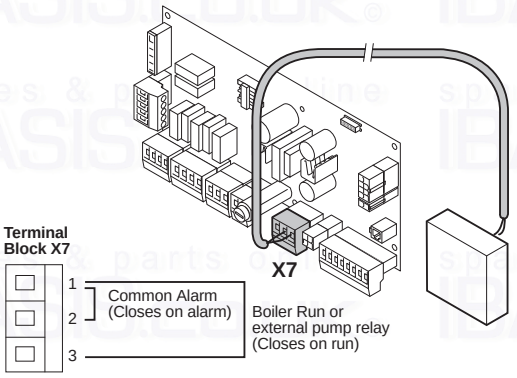

fig. 27 Connecting remote alarm

LTALW7H000034

* never connect a pump directly to connectors 1 and 3 on terminal X7, but only via a relay.

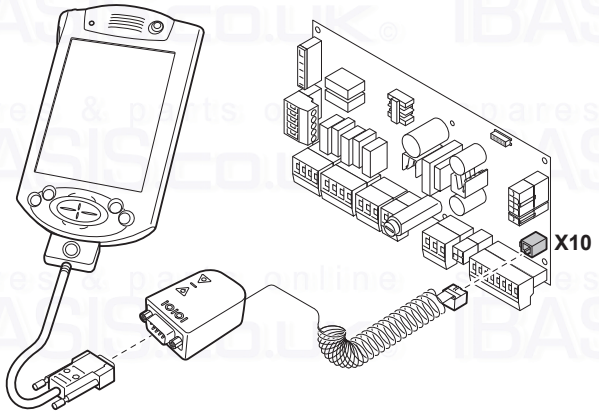

fig. 28 X10 socket connector

LTALW7H000035

2.7.11 Connecting a PC/PDA

Using the optional Recom interface package a PC or PDA can be connected to the X10 “telephone connector”. Using the Recom PDA service software you can load, change and download various boiler settings and readings. See the user instructions supplied with the software/hardware.

☞ Not all PDA will run the Recom software - check with Broag before buying a unit.

2.8 Connecting an external pump

Connect the system pump to terminal X4 (X4 -1 and X4 -2) of the control unit. The pump’s earth connection must be connected to the control unit’s earth connection with an AMP-connector (supplied with boiler). The cable must be fed through the boiler’s casing by means of the supplied cable gland and run trough the cable clamp on the right-hand inside of the boiler.

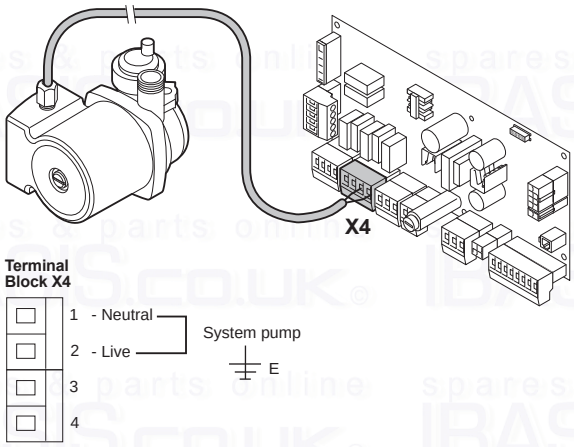

fig. 29 Connecting external pump

59970LTGBW7H043

2.9 Wiring diagram

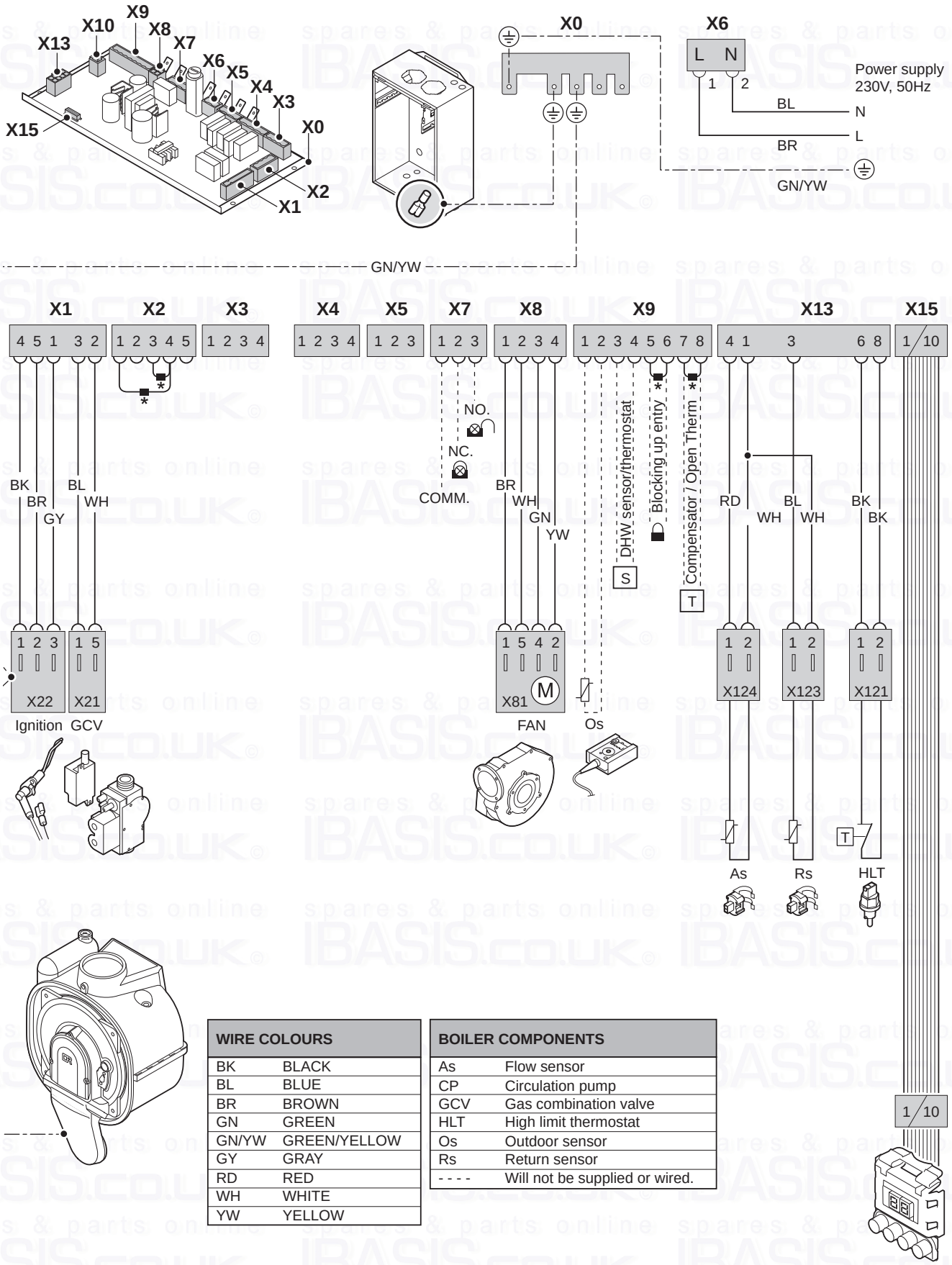

WIRE COLOURS	
BK	BLACK
BL	BLUE
BR	BROWN
GN	GREEN
GN/YW	GREEN/YELLOW
GY	GRAY
RD	RED
WH	WHITE
YW	YELLOW

BOILER COMPONENTS	
As	Flow sensor
CP	Circulation pump
GCV	Gas combination valve
HLT	High limit thermostat
Os	Outdoor sensor
Rs	Return sensor
- - - -	Will not be supplied or wired.

fig. 30 Wiring diagram

59970LTGBW7H013

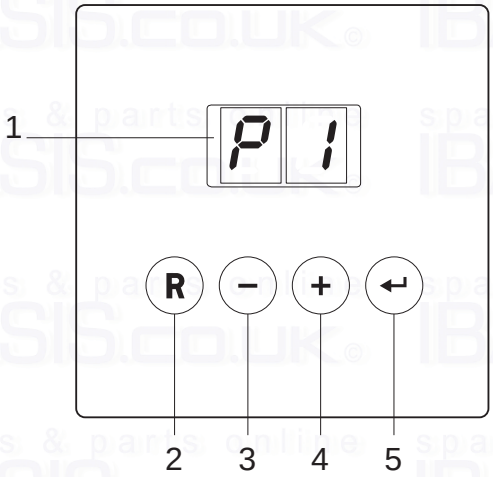

fig. 31 Control Panel

LTALW7H000036

2.10 Commissioning

2.10.1 Control Panel

The control panel of the Remeha Avanta has 4 function keys and a LED display. The function keys are used to read or change the settings and temperatures.

1 = display
*2 = **[reset]** key*
*3 = **[-]** key*
*4 = **[+]** key*
*5 = **[enter]** key*

The display has two positions and displays information on the current operating status of the boiler and any errors. Numbers, dots and/or letters can appear in the display.

If no key is pressed for longer than three minutes with the “boiler in stand-by mode”, only one dot is lit. With the “boiler operating”, two dots are displayed (Factory default).

- Press any key and the current boiler status and operation code will appear in the display.
- In the event of a fault, the fault code is displayed instead of the dots.

2.10.2 Additional guidelines for commissioning

- When commissioning, complete all relevant sections of the Benchmark Commissioning Checklist, located on the inside back of this document.
- Work through all the stages of this section, and send a copy of the completed commissioning details to Broag along with the completed registration card in the supplied warranty leaflet.
- The Avanta boiler has been live test fired on the production line and set up for Natural Gas with an inlet gas pressure of 17- 20 mbar whilst operating and should therefore not require any further adjustments.

At the time of commissioning, complete all relevant sections of the Benchmark Checklist located on the inside back of this document.

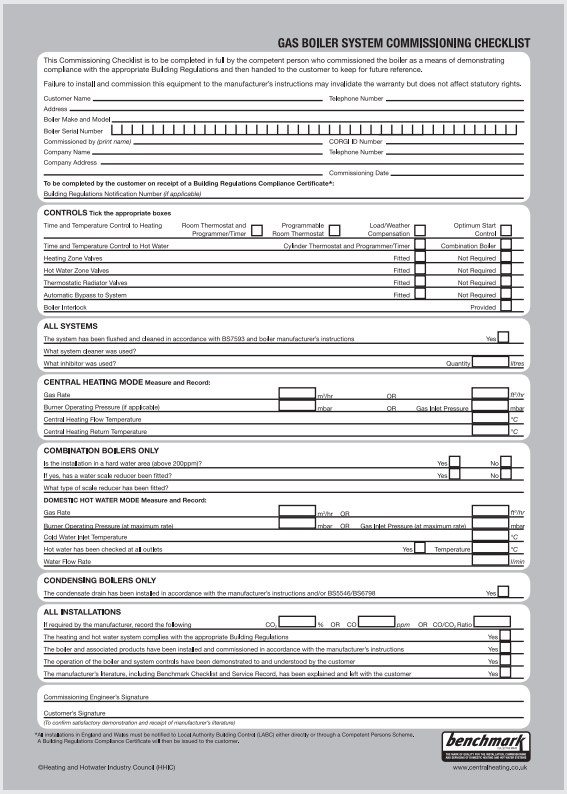

GAS BOILER SYSTEM COMMISSIONING CHECKLIST

This Commissioning Checklist is to be completed in full by the competent person who commissioned the boiler as a means of demonstrating compliance with the appropriate Building Regulations and then handed to the customer to keep for future reference.

Failure to install and commission this equipment to the manufacturer's instructions may invalidate the warranty but does not affect statutory rights.

Customer Name _____ Telephone Number _____
Address _____
Boiler Make and Model _____
Boiler Serial Number _____
Commissioned by (*print name*) _____ CORGI ID Number _____
Company Name _____ Telephone Number _____
Company Address _____
_____ Commissioning Date _____

To be completed by the customer on receipt of a Building Regulations Compliance Certificate*:
Building Regulations Notification Number (*if applicable*) _____

CONTROLS Tick the appropriate boxes

Time and Temperature Control to Heating	Room Thermostat and Programmer/Timer ☐	Programmable Room Thermostat ☐	Load/Weather Compensation ☐	Optimum Start Control ☐
Time and Temperature Control to Hot Water		Cylinder Thermostat and Programmer/Timer		Combination Boiler ☐
Heating Zone Valves			Fitted ☐	Not Required ☐
Hot Water Zone Valves			Fitted ☐	Not Required ☐
Thermostatic Radiator Valves			Fitted ☐	Not Required ☐
Automatic Bypass to System			Fitted ☐	Not Required ☐
Boiler Interlock				Provided ☐

ALL SYSTEMS
The system has been flushed and cleaned in accordance with BS7593 and boiler manufacturer's instructions Yes ☐
What system cleaner was used? _____
What inhibitor was used? _____ Quantity _____ litres

CENTRAL HEATING MODE Measure and Record:
Gas Rate _____ m³/hr OR _____ ft³/hr
Burner Operating Pressure (if applicable) _____ mbar OR Gas Inlet Pressure _____ mbar
Central Heating Flow Temperature _____ °C
Central Heating Return Temperature _____ °C

COMBINATION BOILERS ONLY
Is the installation in a hard water area (above 200ppm)? Yes ☐ No ☐
If yes, has a water scale reducer been fitted? Yes ☐ No ☐
What type of scale reducer has been fitted? _____
DOMESTIC HOT WATER MODE Measure and Record:
Gas Rate _____ m³/hr OR _____ ft³/hr
Burner Operating Pressure (at maximum rate) _____ mbar OR Gas Inlet Pressure (at maximum rate) _____ mbar
Cold Water Inlet Temperature _____ °C
Hot water has been checked at all outlets Yes ☐ Temperature _____ °C
Water Flow Rate _____ l/min

CONDENSING BOILERS ONLY
The condensate drain has been installed in accordance with the manufacturer's instructions and/or BS5546/BS6798 Yes ☐

ALL INSTALLATIONS
If required by the manufacturer, record the following CO_2 _____ % OR CO _____ ppm OR CO/CO_2 Ratio _____
The heating and hot water system complies with the appropriate Building Regulations Yes ☐
The boiler and associated products have been installed and commissioned in accordance with the manufacturer's instructions Yes ☐
The operation of the boiler and system controls have been demonstrated to and understood by the customer Yes ☐
The manufacturer's literature, including Benchmark Checklist and Service Record, has been explained and left with the customer Yes ☐

Commissioning Engineer's Signature _____
Customer's Signature _____
(*To confirm satisfactory demonstration and receipt of manufacturer's literature*)

*All installations in England and Wales must be notified to Local Authority Building Control (LABC) either directly or through a Competent Persons Scheme. A Building Regulations Compliance Certificate will then be issued to the customer.

benchmark
INSTALL COMMISSION MAINTAIN
www.centralheating.co.uk

©Heating and Hotwater Industry Council (HHIC)

fig. 32 Benchmark Checklist

T002019

2.10.3 Putting the boiler into operation

This section details the procedure for putting the boiler into operation. There are 7 stages to the procedure:

1. Isolating the power supply and opening the front cover;
2. Checking the connections and making the boiler operational;
3. Switching the boiler on and setting the controls;
4. Checking/setting the gas/air ratio at full load;
5. Checking/setting the gas/air ratio at low load;
6. Making the boiler ready for use;
7. Instructing the user.

⚠

The boiler must not be put into operation with a different type of gas without reference to par. 2.4.2

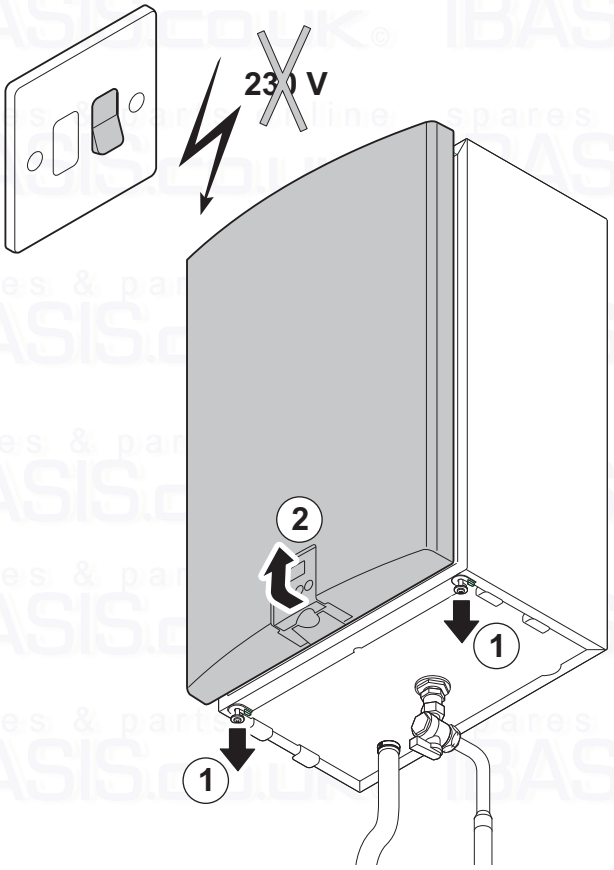

fig. 33 Isolating power

59970LTGBW7H036

1. Isolating the power supply and opening the front cover

- Switch off the boiler at the fused spur and remove the fuse;
- Remove the front panel - release the two screws at the bottom of the front panel, pull the bottom of the panel towards you from the centre, making sure that the plastic catch is released from the central display.

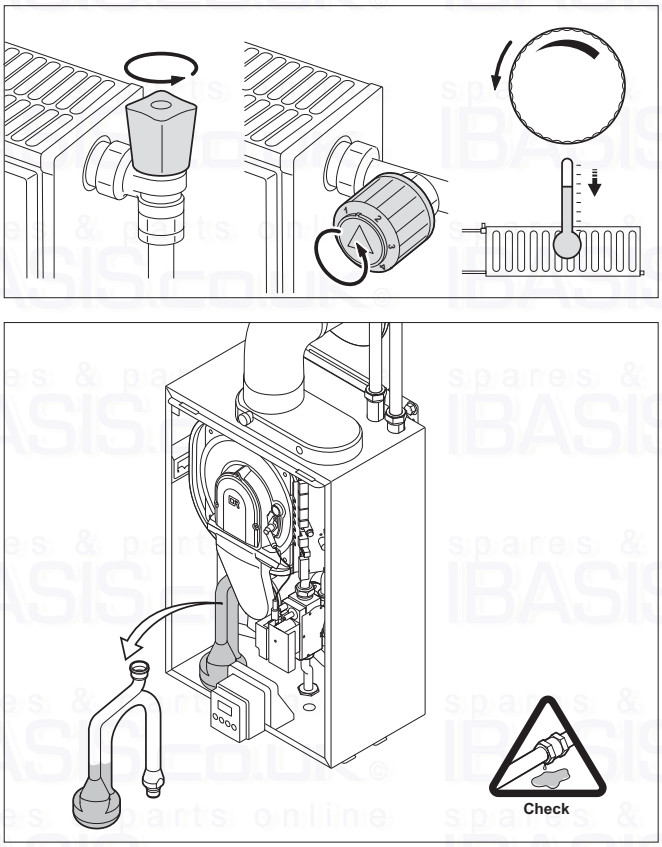

fig. 34 Open the valves

59970LTGBW7H014

2. Checking the connections and making the boiler operational

☞ Open the valves on all the radiators connected to the central heating system before filling the system with water.

- Open the valves on all the radiators connected to the central heating system;
- Fill the system with water, making sure that the feed and expansion tank is full;
- Vent the system;
- Check the condensate siphon. This should be filled with clean water if necessary.

⚠
- Avoid water getting into the boiler.

- Check the system pump (spin the shaft to check that the impellor can move freely);
- Check that all boiler connections are watertight;

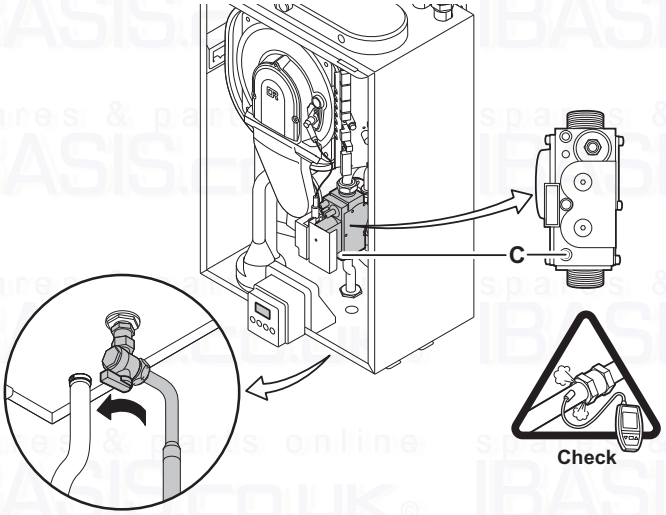

fig. 35 Measurement point c on the gas block

59970LTGBW7H037

- Open the boiler gas valve and check the static pressure to the boiler at the measurement point (C) on the gas block.

⚠

- The boiler has been factory tested for natural gas at 20 mbar.
- The minimum gas inlet pressure is 17 mbar for natural gas
- The minimum gas inlet pressure is 37 mbar for propane.

- Check that the gas supply to the boiler is gas tight (in compliance with the current regulations, see *Chapter* **7** the maximum test pressure at the gas pipe inlet, with the boiler gas valve open, is 60 mbar.
- Vent the gas pipe by unscrewing the measurement point (C) on the gas block (tighten it again as soon as the pipe is fully vented).
- Check that the gas connections in the boiler are sealed.
- Check that all electrical connections, including the earth connection, have been made correctly.
- Check the electrical connections to the thermostat and other external controls.
- Check that the flue-gas and air-supply connections are sealed.

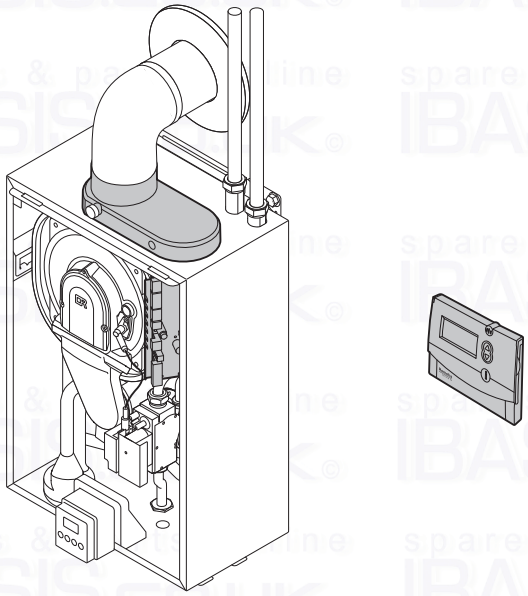

fig. 36 Check electrical connections and thermostat

59970LTGBW7H015

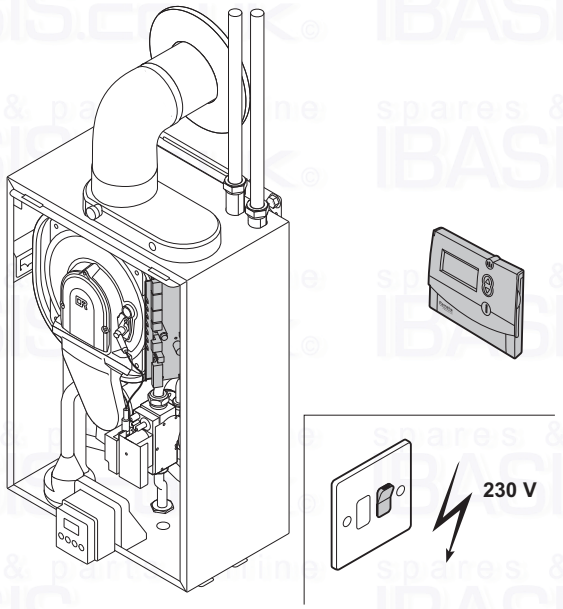

fig. 37 Power on and controls on heat demand

59970LTGBW7H016

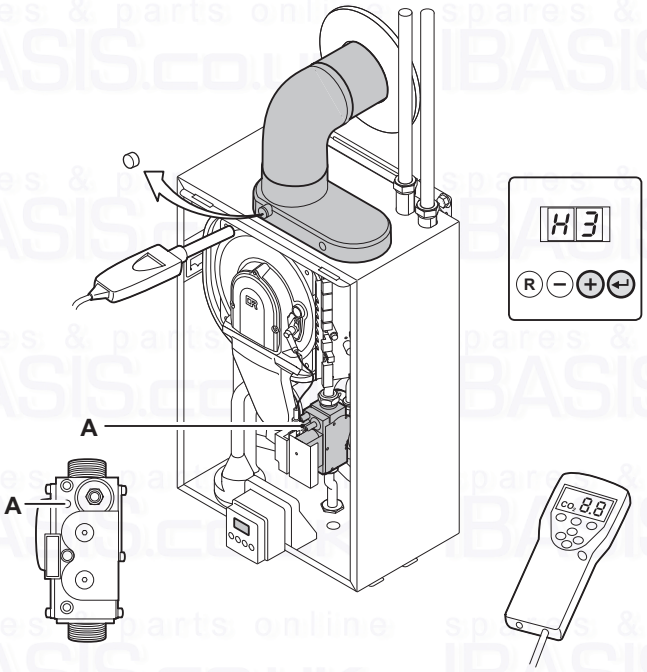

fig. 38 Check the gas/air ratio control – set to full load – gas/ air ratio adjustment A on gas block

59970LTGBW7H017

3. Switching the boiler on and setting the controls

- Replace the fuse and switch on the 230 V power supply.
- Set the controls to heat demand.
- When 230v power is first applied to the boiler or after the 230v supply has been isolated for maintenance the boiler will not start until it has fully completed its venting cycle – this will take about 3 minutes during which time the display will show F XX alternating with P XX (where XX displays the software version number). This is not a fault, please wait until the cycle is finished. Provided no error codes appear during this time, the boiler will then start to run if called for by the controls.
- The boiler now starts to run. The operational status is shown in the display. Combustion checking/setting must be carried out by a competent person. It must not be carried out unless that person is equipped with a combustion analyser which conforms to the relevant British Standards.

4. Setting the gas/air ratio at full load

The Avanta boilers are suitable for both natural gas and propane firing (restrictor required for propane not supplied). The boilers are supplied as standard set for natural gas (G20), therefore the following procedure must be carried out BEFORE the boilers are fired and commissioned for the first time on propane:

- fit restrictor (instructions supplied);
- adjust the fan speed (for procedure see par.2.10.8, for values see table 05 and table 07) and;
- adjust the gas/air ratio (for values see table 05 and table 07).

Setting values O_2/CO_2 for natural gas			
Boiler type	Fan speed (rpm)	O_2	CO_2
	Full load H3 *)	%	%
12v	approx. 2400	5.2 ± 0.1	8.8 ± 0.1
18v	approx. 3500	5.2 ± 0.1	8.8 ± 0.1
24v	approx. 4500	5.2 ± 0.1	8.8 ± 0.1

table 04 Setting values full load CO_2 and O_2 (front panel not fitted)

Setting values O_2/CO_2 for LPG (propane)			
Boiler type	Fan speed (rpm)	O_2	CO_2
	Full load H3 *)	%	%
12v	Approx. 2400	5.1 ± 0.1	10.3 ± 0.1
18v	Approx. 3300	5.1 ± 0.1	10.3 ± 0.1
24v	Approx. 4300	5.1 ± 0.1	10.3 ± 0.1

table 05 Setting values full load CO_2 and O_2 (front panel not fitted)

*) On forced full load, the 2nd digit indicates the operating code

- Unscrew the flue gas sampling cap and connect the flue gas analyser.
- Set boiler to full load:
  Press the **[enter]-** key, keep it pressed and also press the **[+]-**key until H3 appears in the display; full load has been set.
- Once the unit has reached the full-load fan speed, measure the O_2/CO_2-percentage and compare this to the values in *table 04 or table 05.*
- If the values are not in accordance with the table then correct the gas /air ratio controls using the adjusting screw A on the gas block.
- If the value is too low turn the screw A anti clockwise this increases the gas rate – if the value is too high turn the screw clockwise which decreases the gas rate
- Check the flame through the sight glass which should be stable with a regular blue distribution.

☞
Only make small adjustments of the adjusting screw, maximum 1/8 turns when setting O_2/CO_2

☞
Ensure that the analysing probe has a gas tight seal in the sampling point with the probe end in the centre of the flue duct.

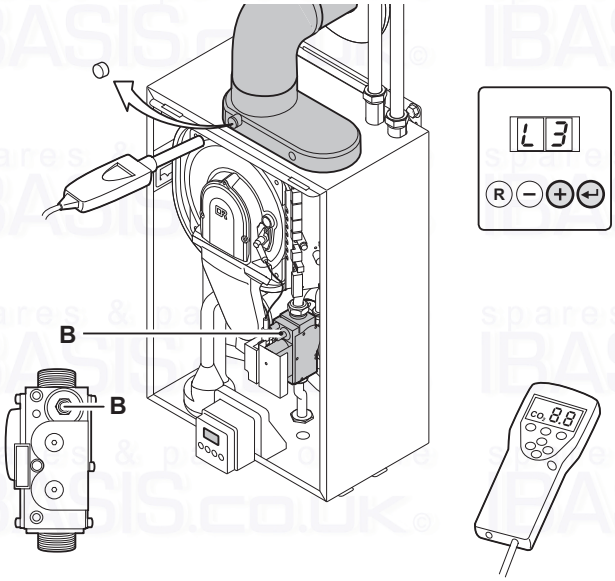

fig. 39 Check the gas/air ratio control – set to part load – gas/air ratio adjustment B on gas block

59970LTGBW7H018

5. Setting the gas/air ratio at part load

Setting values O_2/CO_2 for natural gas			
Boiler type	**Fan speed (rpm)**	O_2	CO_2
	Part load L3 *)	%	%
12v	Approx. 1300	5,2 ± 0,1	8.8 ± 0,1
18v	Approx. 1300	5,2 ± 0,1	8.8 ± 0,1
24v	Approx. 1300	5,2 ± 0,1	8.8 ± 0,1

table 06 Setting values part load CO_2 and O_2 (front panel not fitted)

Setting values O_2/CO_2 for LPG (propane)			
Boiler type	**Fan speed (rpm)**	O_2	CO_2
	Part load L3 *)	%	%
12v	Approx. 2000	5.1 ± 0.1	10.3 ± 0.1
18v	Approx. 2000	5.1 ± 0.1	10.3 ± 0.1
24v	Approx. 2000	5.1 ± 0.1	10.3 ± 0.1

table 07 Setting values part load CO_2 and O_2 (front panel not fitted)

*) On forced part load, the 2nd digit indicates the operating code.

- Set boiler to part load:
- Press the **[enter]-** key until L3 appears in the display, part load has been set.
- Once the unit has reached the part load fan speed, measure the O_2/CO_2-percentage and compare this to the value in *table 06*.
- If the values are not in accordance with the table then correct the gas /air ratio controls using the adjusting screw B on the gas block.
- If the value is too low turn the screw B clockwise this increases the gas rate – if the value is too high turn the screw B anti clockwise which decreases the gas rate Check the flame through the sight glass which should be stable with a regular orange distribution. Once the unit has been set to part load, the 'test at full load' should be repeated.

Only make small adjustments of the adjusting screw, maximum 1/8 turns when setting O_2/CO_2

Ensure that the analysing probe has a gas tight seal in the sampling point with the probe end in the centre of the flue duct.

- Repeat the 'test at full load' and 'test at part load' as often as necessary until the correct values are achieved without further adjustments

6. Preparing the boiler for use

- Remove the analysing probe and replace the cap on the flue gas sampling point.
- Refit the front panel and secure with the two screws again.
- Press **[reset]**-key for the boiler to return to the normal operating mode.

Following a manual override the boiler will return to normal operating mode if no keys are pressed for 15 minutes.

- Run the boiler on heating until the system reaches approx 70°C
- Switch the boiler off (using the controls i.e. thermostat or time clock)
- Complete the type plate in the boiler by adding the gas type – Natural or LPG
- Fill in Commissioning Checklist, located on the inside back of this document.

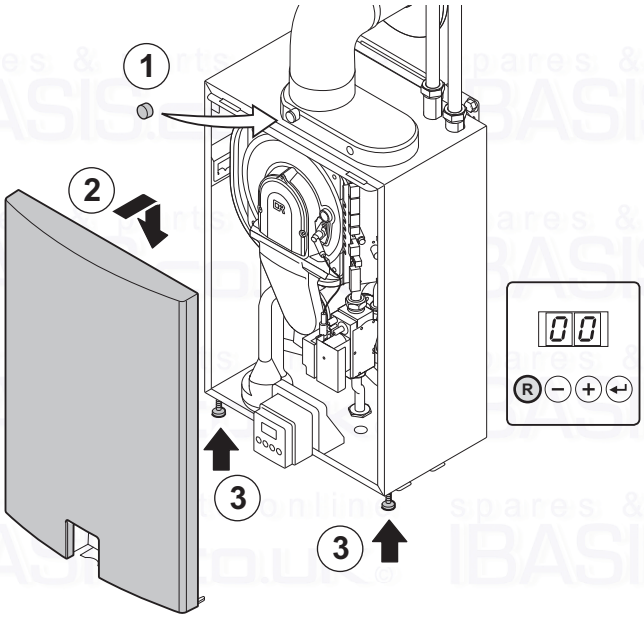

fig. 40 Preparing boiler for use

59970LTGBW7H019

The boiler is now ready for operation.

The Remeha Avanta is delivered pre-tested and operating parameters set up with standard factory settings to suit the most common systems. These setting can be adjusted to suit specific site conditions but must not be changed without reference to Broag or one of our approved contractors

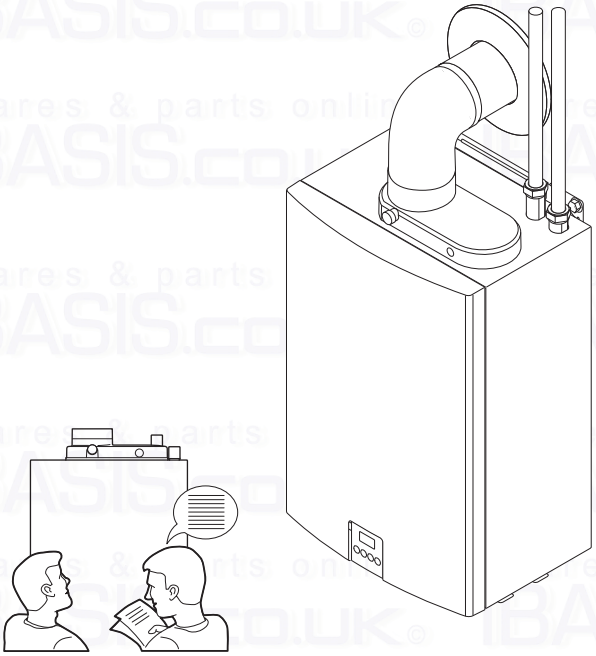

fig. 41 *Instructing the user*

59970LTGBW7H020

7. Instructing the user

- It is the responsibility of the installer as part of the commissioning procedure to instruct the user in the day to day operation of the boiler and controls fitted to the system and to hand over the completed Boiler Benchmark Checklist at the back of this manual.

2.10.4 Normal start-up procedure

- Switch on the boiler at the fused spur unit and ensure that the time control is in the on position and any other controls (i.e. room thermostat etc) calling for heat
- The boiler will begin its start sequence.
  The following sequence will appear in the display:
  - A display test will briefly appear showing all segments of the display.
  F XX software version;
  P XX parameter version;
  - A venting cycle of 3 minutes now follows, the version numbers will be displayed alternately;
  - Next, the following will appear in the display;
  0 ; stand-by mode

2.10.5 Error during the start-up procedure

- If the display is blank (should show red dots or letters), check:
  - 230 V main supply available to switch spur
  - switch spur fuse
  - cable and connections between the switched spur and the boiler control unit
  - fuse on the boiler control unit (F2 = 2AT, 230V)
- An error code appearing in the display can be recognised as follows:
  E 10, (the display alternately shows an E and a number e.g. 10). The meaning of this error codes can be found in the error table, see *Chapter 4.*
- Resolve the error first if possible.
- Press the **[reset]**- key and hold for at least 1 second to restart the boiler.

☞ After any error E1, E2, E7, E10 or E13 ; the 3 minute venting cycle will run first before starting the boiler.

- Checking **CH** function;
  - Ensure the time control is in the CH on position
  - Set the room thermostat on a high demanding temperature and, the display shows
  1 ; pre-purge stage
  2 ; Ignition stage
  3 ; operating in CH mode.
  - Set the room thermostat back to a lower temperature (no more heat demand), the display shows;
  5 ; waiting-time; 3 to 10 minutes (only when flow temperature has already been reached and heating demand is still existing)
  1 ; pre-purge stage
  6 ; pump run on after CH or DHW is satisfied
  0 ; stand-by mode

2.10.6 *Read out settings*

The following settings can be read out in the 'user menu':
- t1 = flow temperature [°C];
- t2 = return temperature [°C];
- t3 = calorifier temperature [°C];
- t4 = outside temperature [°C];
- FL = ionisation current [µA];
- nF = fan speed [rpm];

- Press the **[+]** key, until t1 appears and, for example, 68 (68°C), the current flow temperature;
- Press the **[+]** key again until t2 appears and, for example, 45 (45°C), the current return temperature;
- Press **[+]** key again until FL appears and e.g. 6.0 (6uA), the present ionisation current;
- Press **[+]** key again until nF appears and e.g. 30 (3000 rpm), the present fan speed;
- Press **[+]** key again and the read-out cycle will start again with t1, etc.;
- Press **[reset]** key to return to the display with the current operating status.

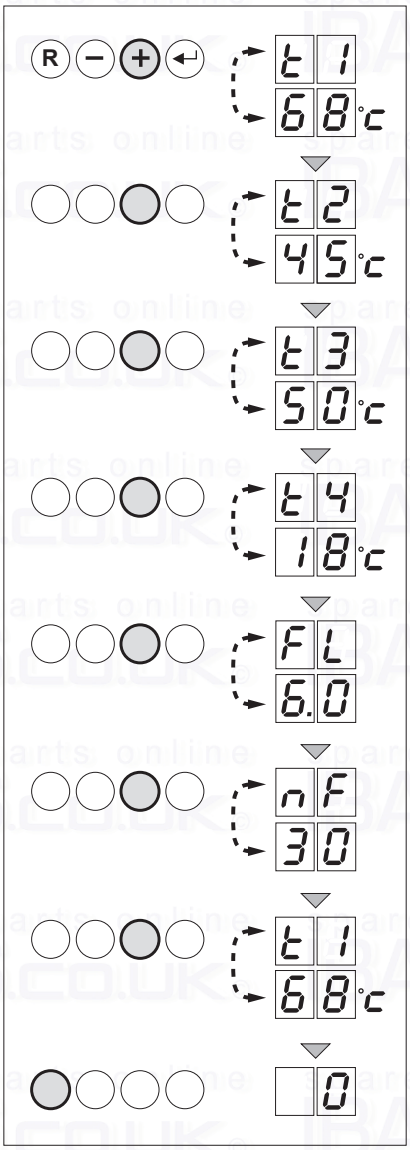

fig. 42 Read out settings

LT.AL.W7H.000.046

2.10.7 *Adjust the boiler according to the system*

The operating parameters of the Remeha Avanta have been factory set to suit most systems. However it is possible to adjust some of the parameters to enable the Remeha Avanta to operate more efficiently to match specific system designs and site conditions. These parameters are split into two specific sections

1. User level – Parameters P 1 to P 6; can be changed by the user to suit CH and DHW comfort conditions
2. Service level – P 17 to dF ; must only be changed by Broag approved Engineer after consultation with the system designer.

How to change the parameters at user level can be read on the “Short reference card” provided and therefore will not be detailed in this Installation and Service manual.

2.10.8 *Changing the parameters at service level (with access code)*

To avoid non authorised adjustments, some parameter settings can only be changed once the special access code 12 has been entered. This code may only be used by qualified installers. The following settings can be changed at user and service level:

Codes in display		Description	Setting range and notes where applicable	Factory settings		
				12v	18v	24v
Can also be changed by users	P 1	T_{set} flow	20 - 85°C	75°C		
	P 2	T_{set} DHW	40 - 65°C	55°C		
	P 3	Boiler regulation	0 = CH_{off} and DHW_{off} 1 = CH_{on} and DHW_{on} 2 = CH_{on} and DHW_{off} 3 = CH_{off} and DHW_{on}	2		
	P 4	Eco or comfort setting	0 = comfort setting 1 = eco mode* 2 = regulated by controller	2		
	P 5	Anticipated current for thermostat on/off	0 = no anticipated current 1 = anticipated current	0		
To be changed by installer only	P 6	Display off automatically	0 = display stays off 1 = display stays on 2 = display light switches off automatically after 3 minutes	2		
	P 17	Maximum fan speed CH (natural gas)	10 – 70 x 100 rpm	24[1]	35[1]	45[1]
		Maximum fan speed CH (propane)	10 – 70 x 100 rpm	24[1]	33[1]	43[1]
	P 18	Maximum fan speed DHW (natural gas)	10 – 70 x 100 rpm	24[1]	35[1]	45[1]
		Maximum fan speed DHW (propane)	10 – 70 x 100 rpm	24[1]	33[1]	43[1]

To be changed by installer only	P 19	Minimum fan speed (natural gas)	**Do not change**	13
		Minimum fan speed (propane)	**10 - 40**	20[1]
	P 20	Starting fan speed (natural gas)	**Do not change**	25
		Starting fan speed (propane)	**Do not change**	25
	P 21	Pump setting CH	**Do not change**	0
	P 22	Pump running time after CH	1 - 99 minutes	2
	P 23	Connection with Heat Recovery Unit (HRU)	0 = no connection with HRU 1 = connection with HRU	0
	P 24	State remote alarm (X7 terminal)	0 = off (connectors 1 and 2 closed) 1 = alarm signal (connectors 1 and 2 closed) 2 = run indication (connectors 1 and 3 closed) 3 = ext. gas valve (connectors 1 and 3 closed) 4 = external pump relay (connectors 1 and 3 closed)	0
	P 25	Legionella protection	0 = off 1 = on 2 = automatic (after putting boiler into operation, it will run for DHW operation 65°C once a week)	0
	P 26	DHW cut-in temperature	2 - 15°C	5**
	P 27	Heat curve set point flow temperature	0 - 60 °C	20
	P 28	Heat curve set point outside temperature (min)	0 - 30 °C	20
	P 29	Heat curve set point outside temperature (max)	-40 - 0 °C	- 15***
	P 30	Boiler type	**Do not change**	3
	P. 31	Set point augmentation calorifier	0 - 20 °C	15**
	P dF (P dU is shown later)	Restore factory settings	On identification plate dF setting X is shown. Change parameter into X will restore the factory settings, *see par. 2.10.10*	X
			On identification plate dU setting Y is shown. Change parameter into Y will restore the factory settings, *see par. 2.10.10*	Y

table 08 Settings at service level

[1] Do not exceed this value

* The boiler in combination with an external calorifier will not warm up the calorifier in the Eco-mode.

** Only in combination with a calorifier with a DHW sensor

*** “Minus” character is not shown in display

⚠ Changing the factory settings could result in the boiler not working properly.

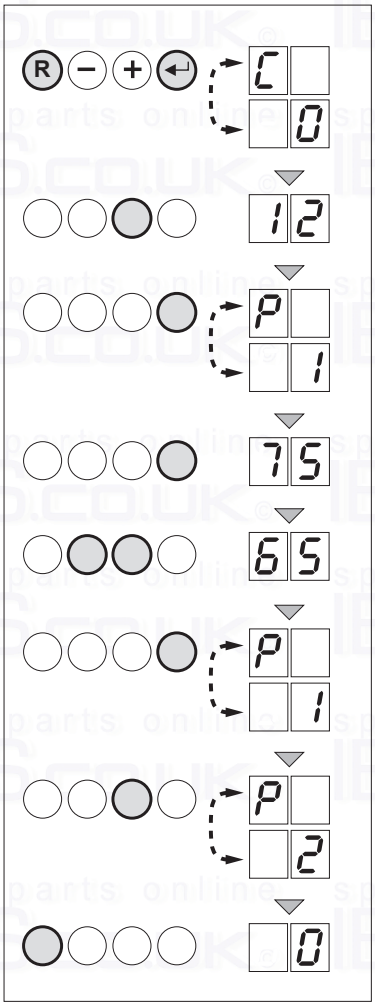

fig. 43 Change parameters in service level

LT.AL.W7H.000.047

The parameters can be changed from the stand-by status as follows:

- Press the **[enter]**-key and briefly the **[reset]-** key until codes C and 0 appear alternately in the display.
- Press the **[+]**-key until access code 12 is displayed.
- Press the **[enter]**-key until P 1 appears (codes P and 1 are displayed alternately);
- This parameter can now be changed as follows;
- Press the **[enter]**-key; the set value for the maximum flow temperature now appears e.g.; 75 (75°C).
- Press the **[+]** or **[-]**-key to change this value, for example to 65 (65°C).
- Press **[enter]**-key to confirm the value; codes P and 1 are displayed alternately.
- Press the **[+]**-key to change the next parameter, etc.
- Press **[reset]**-key to return to the operating mode.

The boiler will automatically return to the normal operating mode if no keys are pressed for 10 minutes.

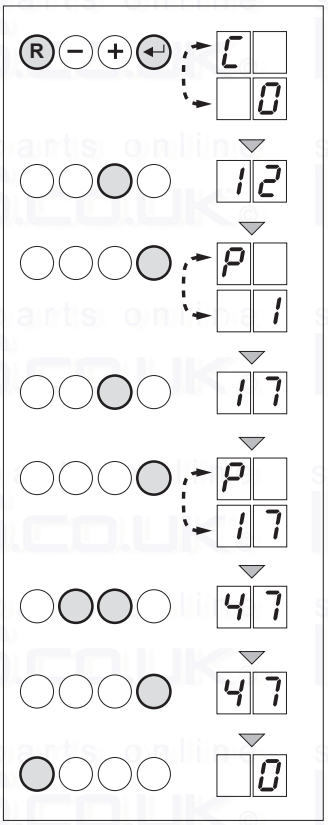

fig. 44 Change boiler output

LT.AL.W7H.000.048

2.10.9 Changing the maximum output (Hi) for CH operation

The maximum output for CH operation can be changed with parameter P 17 (maximum fan speed) and is set standard to a speed of 2400, 3500 or 4600 rpm for the three System-types. See the speed-input ratio figures.

This parameter can be changed from the stand-by status as follows:

- Press the **[enter]**-key and briefly the **[reset]-** key until codes C and 0 appear alternately in the display.
- Press the **[+]**-key until access code 12 is displayed.
- Press the **[enter]**-key until P 1 appears (codes P and 1 are displayed alternately);
- Press the **[+]**-key to go to parameter 17.
- Press the **[enter]**-key until P 17 appears (codes P and 17 are displayed alternately);
- Press the **[+]** or **[-]-**key to change this value for Avanta 18v, for example to 35 (3500 rpm corresponds with 18kW).
- Press **[enter]**-key to confirm the value.
- Press **[reset]**-key to return to the operating mode.

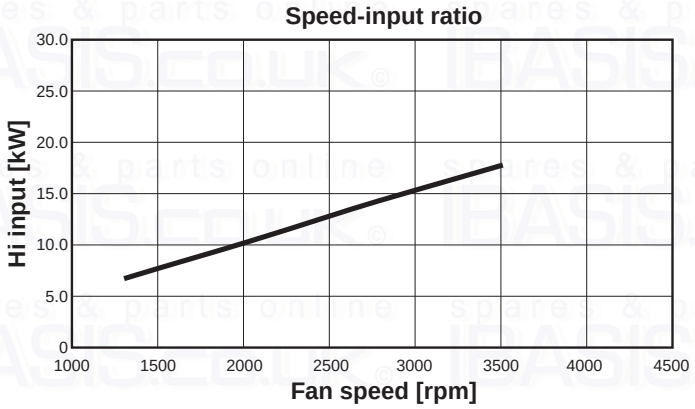

fig. 45 Fan speed / boiler input ratio Avanta 12V and 18V

T001103

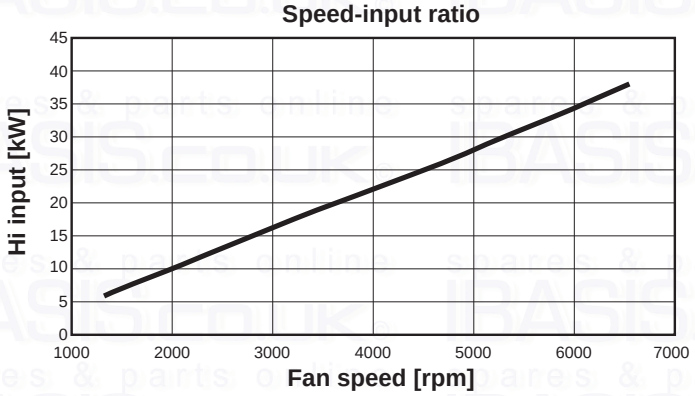

fig. 46 Fan speed / boiler input ratio Avanta 24V

T001104

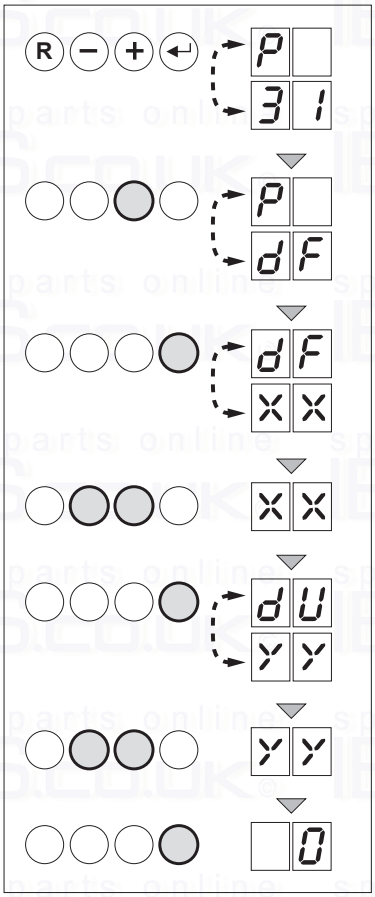

fig. 47 Restore factory settings

LT.AL.W7H.000.052

2.10.10 Restore factory settings

The factory settings can be restored in the service level as follows:

1. After parameter P31 has shown, press the **[+]**-key; dF and XX appear alternately;
2. Press ↵-key; XX appears;
3. Read boiler identification plate for value of dF ; press **[+]** or **[-]** key to reach this value;
4. Press ↵-key to confirm; dU and YY appear alternately;
5. Read boiler identification plate for value of dU ; press **[+]** or **[-]** key to reach this value;
6. Press ↵-key to confirm; boiler restarts with original factory settings.

2.11 Putting the boiler out of operation

The boiler must be switched off and allowed to cool down before any maintenance or repairs are carried out. If the central heating system is not going to be used for a long time (during the holidays, for instance, or frost-free periods) it is advisable to put the boiler out of operation.

2.11.1 Boiler with frost protection, during longer periods of non-use

- Set the room thermostat or other controls to a low temperature, e.g. 10°C,
- Switch setting P4 to 1 (Eco mode), this will switch off the heat retention function.

Now the boiler will only start working to protect itself against freezing.
With external frost protection, the boiler can also prevent the central heating system from freezing.

2.11.2 Boiler without frost protection, during longer periods of non-use

- Turn time clock off and allow system to cool down then isolate mains power supply at the fused spur unit
- Isolate the gas supply at the boiler valve

⚠
Drain the boiler and central heating system if you will not be using the home for a long period and there is a chance of night frost.

3 INSPECTION AND MAINTENANCE

The Remeha Avanta is practically maintenance free but should be inspected annually.

☞
If during the annual inspection the flue gas analysis indicates that the values are outside the figures given *in table 09*, maintenance work should be carried out as described in *par.3.2.* Also carry out maintenance if the ionisation read-out value is lower than 3 or higher than 9µA, or when the flame core is not correct.

Only Remeha spare parts/materials should be used.
All service and maintenance must be carried out by a qualified Engineer with the relevant training and certification (i.e. ACS - IEE registrations etc).

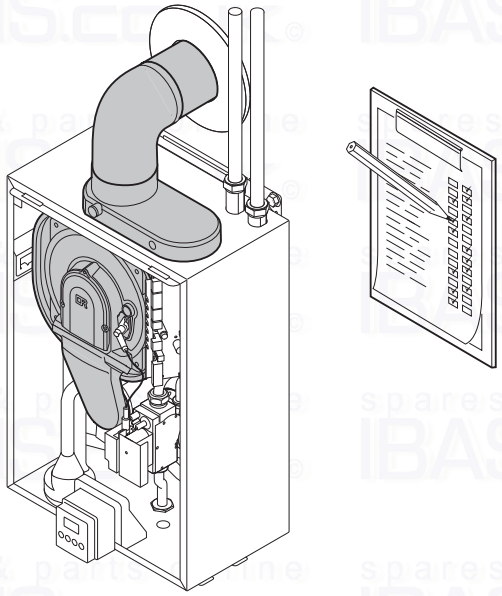

fig. 48 Annual inspection

59970LTGBW7H022

3.1 Inspection

The annual inspection of the Remeha Avanta can be limited to the following checks:

- check the flue pipes and air supply pipes for leaks, see par. 3.1.1.;
- check and clean (if necessary) the condensate siphon, see par.3.1.2.;
- check the ignition electrode and ionisation, see par. 3.1.3;
- check the combustion and flame pattern, see par. 3.1.4;
- Fill in the Benchmark Service Record on the inside back pages of this document.

3.1.1 Checking the flue pipes and air supply pipes for leaks

- Check that the flue and air-supply connections and pipes are sealed and the terminal exit is clear.

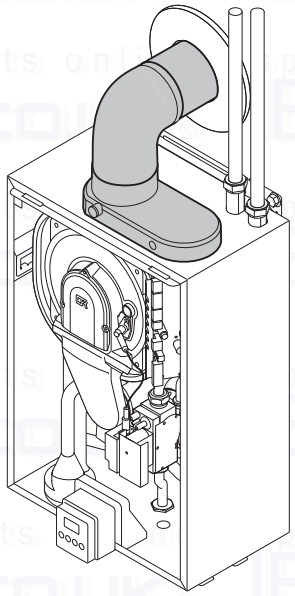

fig. 49 Checking flue pipes

59970LTGBW7H023

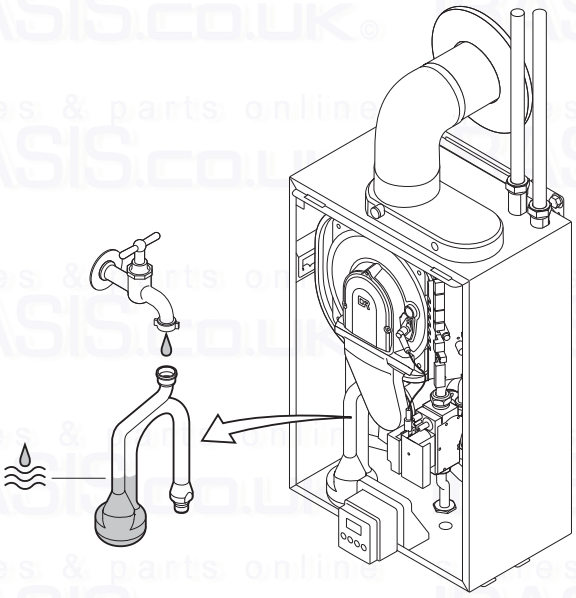

fig. 50 Checking the condensate siphon

59970LTGBW7H0234

3.1.2 Checking the condensate siphon

- Check the condensate siphon. Remove any dirt residues and refill with clean water to the mark.

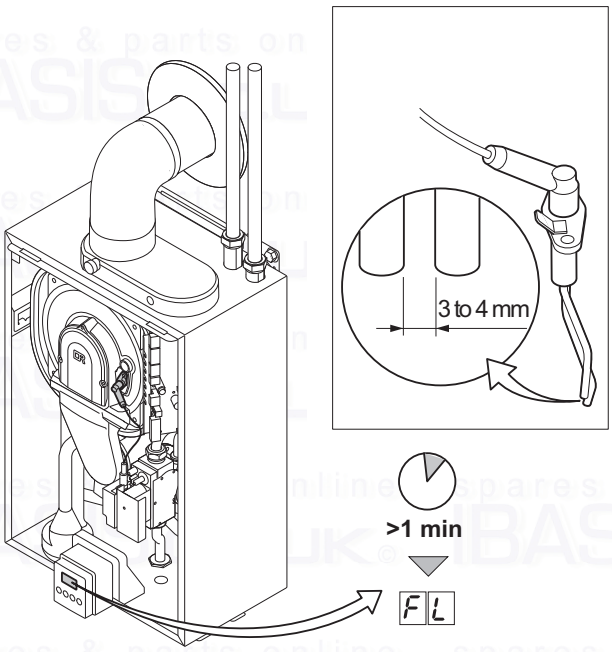

fig. 51 Checking the ignition electrode

59970LTGBW7H026

3.1.3 Checking the ignition electrode

- Check the ionisation /ignition electrode for:
  - deposits (remove any white deposits with abrasive cloth);
  - the adjustment of the ignition electrode (between 3 and 4 mm);
  - the quality of the gasket and condition of the porcelain (this should not be cracked);
- Check the ionisation current after 1 minute on the display code FL, *see par. 2.10.6.*

If the read-out value is lower than 3 or higher than 9µA, check cable and connections are sound if OK
replace the ignition electrode.

☞
The ignition cap is fixed on the ignition electrode and therefore cannot be removed.

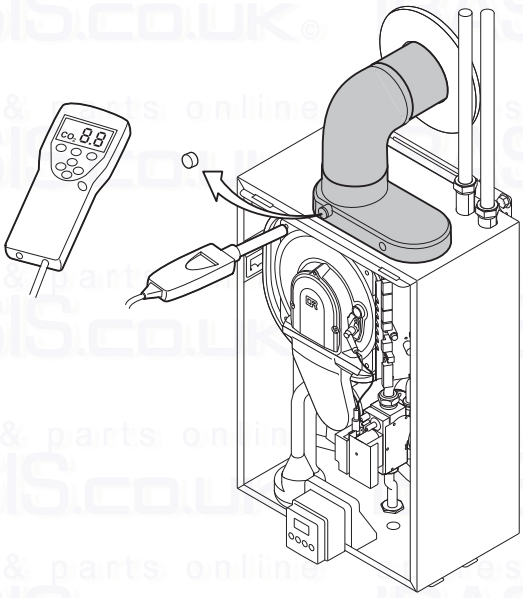

fig. 52 Checking the combustion

59970LTGBW7H025

3.1.4 Checking the combustion

- Measure the O_2/CO_2 percentage and the flue gas temperature at the flue gas sample point.

Do this as follows:

- heat the water temperature in the boiler to approx. 70°C;
- unscrew the top of the flue gas point of measurement;
- measure the O_2/CO_2 percentage and compare this to the check values in *table 09.*

☞ Ensure that the analysing probe has a gas tight seal in the sampling point with the probe end in the centre of the flue duct.

Checking values O_2/CO_2 for natural gas				
Boiler-type	Fan speed (rpm)		O_2	CO_2
	Full load H 3	Part load L 3	%	%
12v	ca. 2400	ca. 1300	5,2 ± 0.2	8.8 ± 0.3
18v	ca. 3500	ca. 1300	5,2 ± 0.2	8.8 ± 0.3
24v	ca. 4500	ca. 1300	5,2 ± 0.2	8.8 ± 0.3

table 09 Checking values O_2/CO_2 (front panel not fitted)

Checking values O_2/CO_2 for LPG (propane)				
Boiler-type	Fan speed (rpm)		O_2	CO_2
	Full load H 3	Part load L 3	%	%
12v	ca. 2400	ca. 2000	5.1 ± 0.2	10.3 ± 0.3
18v	ca. 3300	ca. 2000	5.1 ± 0.2	10.3 ± 0.3
24v	ca. 4300	ca. 2000	5.1 ± 0.2	10.3 ± 0.3

table 10 Checking values O_2/CO_2 (front panel not fitted)

☞ The O_2/CO_2 - values *in table 09* and *table 10* are **checking** values. For **setting** values see *table 04 - table 07*

If the flue gas analysis readings are within the values *in table 09* the boiler combustion is correct. However, if the readings are outside the given values, then adjust the gas air ratio control to the given values, *see table 04 - table 07 in par. 2.10.3.* If the adjustments cannot achieve the mentioned values, the boiler will require a full service please refer to the maintenance instructions in *par. 3.2.*

- Check the flame via the inspection glass; in full load the flame should be stable with an even blue colour and in part load should be stable with an even orange colour.

After servicing, complete the relevant Service Interval Record section of the Benchmark Checklist located on the inside back pages of this document.

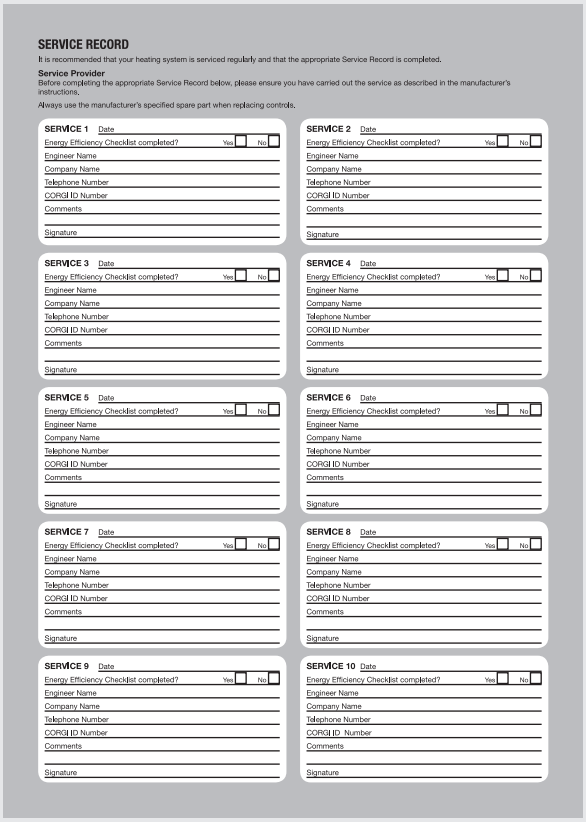

SERVICE RECORD

It is recommended that your heating system is serviced regularly and that the appropriate Service Record is completed.

Service Provider

Before completing the appropriate Service Record below, please ensure you have carried out the service as described in the manufacturer's instructions.

Always use the manufacturer's specified spare part when replacing controls.

SERVICE 1 Date
Energy Efficiency Checklist completed? Yes ☐ No ☐
Engineer Name
Company Name
Telephone Number
CORGI ID Number
Comments
Signature

SERVICE 2 Date
Energy Efficiency Checklist completed? Yes ☐ No ☐
Engineer Name
Company Name
Telephone Number
CORGI ID Number
Comments
Signature

SERVICE 3 Date
Energy Efficiency Checklist completed? Yes ☐ No ☐
Engineer Name
Company Name
Telephone Number
CORGI ID Number
Comments
Signature

SERVICE 4 Date
Energy Efficiency Checklist completed? Yes ☐ No ☐
Engineer Name
Company Name
Telephone Number
CORGI ID Number
Comments
Signature

SERVICE 5 Date
Energy Efficiency Checklist completed? Yes ☐ No ☐
Engineer Name
Company Name
Telephone Number
CORGI ID Number
Comments
Signature

SERVICE 6 Date
Energy Efficiency Checklist completed? Yes ☐ No ☐
Engineer Name
Company Name
Telephone Number
CORGI ID Number
Comments
Signature

SERVICE 7 Date
Energy Efficiency Checklist completed? Yes ☐ No ☐
Engineer Name
Company Name
Telephone Number
CORGI ID Number
Comments
Signature

SERVICE 8 Date
Energy Efficiency Checklist completed? Yes ☐ No ☐
Engineer Name
Company Name
Telephone Number
CORGI ID Number
Comments
Signature

SERVICE 9 Date
Energy Efficiency Checklist completed? Yes ☐ No ☐
Engineer Name
Company Name
Telephone Number
CORGI ID Number
Comments
Signature

SERVICE 10 Date
Energy Efficiency Checklist completed? Yes ☐ No ☐
Engineer Name
Company Name
Telephone Number
CORGI ID Number
Comments
Signature

fig. 53 Benchmark Checklist

T002020

3.2 Maintenance

To conduct maintenance:

☞ Ensure that a service gasket set and new ignition/ionisation electrode is available before carrying out this procedure.

⚠
- Isolate power supply at the fused spur before carrying out any work on the boiler.

1. Open the boiler

- Isolate the 230 V supply at the switched spur and remove the fuse
- Isolate the gas supply at the boiler gas valve
- Remove the front panel - release the two screws at the bottom of the front panel, pull the bottom of the panel towards you from the centre, making sure that the plastic catch is released from the central display.

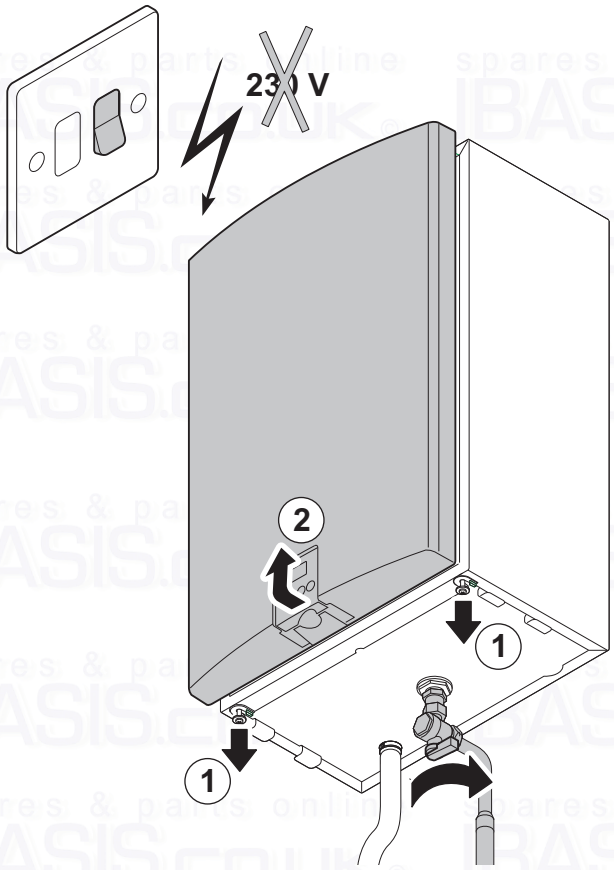

fig. 54 Open the boiler

59970LTGBW7H038

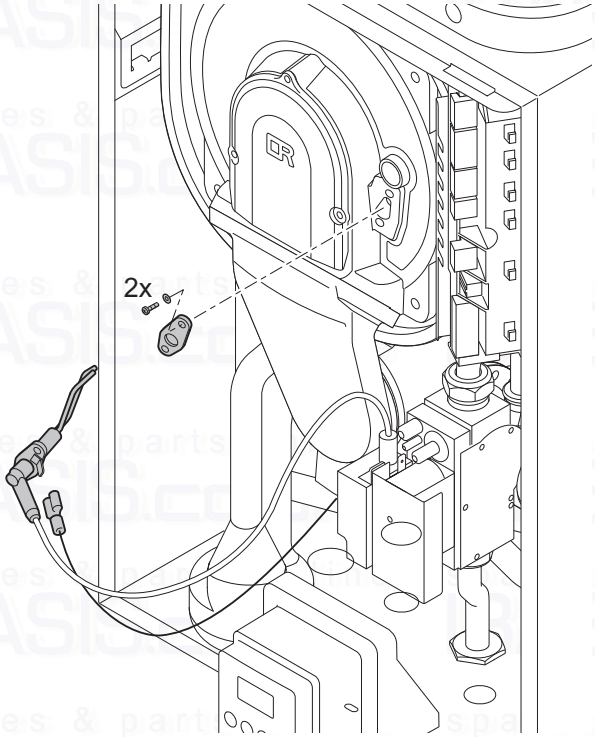

fig. 55 Maintenance the electrode

59970LTGBW7H027

2. Maintenance of the ignition/ionisation electrode

- Disconnect the earth wire from the electrode mounting plate.
- Release the two screws on the electrode and remove the assembly.
- Inspect, clean re-gap or replace the electrode, see par 3.1.3.
- Do not over tighten the screws when replacing.

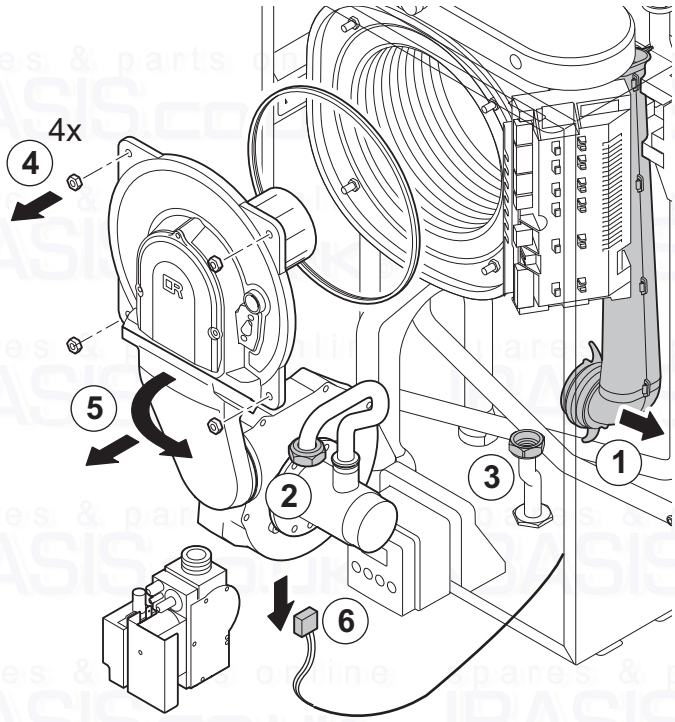

fig. 56 Dismantling the front plate of the heat exchanger

59970LTGBW7H028

3. Dismantling the front plate of the heat exchanger

- Isolate gas supply.
- Release the ignition transformer mounting plate and remove it completely.
- Disconnect the electrical connection on the gas block.
- Release the union nut from the gas pipe on the inlet to the gas block.
- Disconnect the electrical plug on the back of the fan, so it becomes accessible.
- Release the four nuts on the heat exchanger front plate
- Carefully pull the front plate assembly c/w fan, gas block, venturi pipe and burner unit away from the heat exchanger by approx. 10 cm.
- Remove the front plate assembly completely.

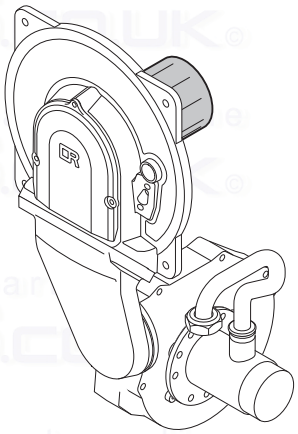

fig. 57 Checking the burner

59970LTGBW7H029

4. Maintenance to the burner

- Carefully clean the burner with pressured air (do not keep the nozzle to close to the surface).
- Visual inspection of the burner for any damages or cracks on the surface. If you see any damages, than replace the burner.

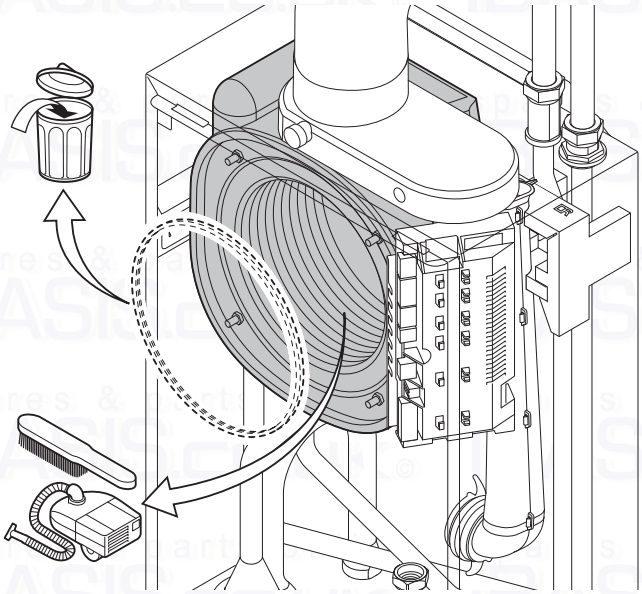

fig. 58 Maintenance to the heat exchanger

59970LTGBW7H030

5. Maintenance to the heat exchanger (CH)

- Check the seal between the front plate and the heat exchanger and the insulation section. Replace sealing.
- Handle the fragile front-plate insulation and the back-plate insulation of the heat exchanger with great care and do not let them get wet.
- Visual inspection of the heat exchanger for scale or dirt. If you see obvious deposits, than clean the heat exchanger carefully. Carefully remove any loose dirt with a vacuum cleaner. Then brush the coils of the heat exchanger (if required a cleaning brush is available as an accessory) and remove the loosened particles with a vacuum cleaner.

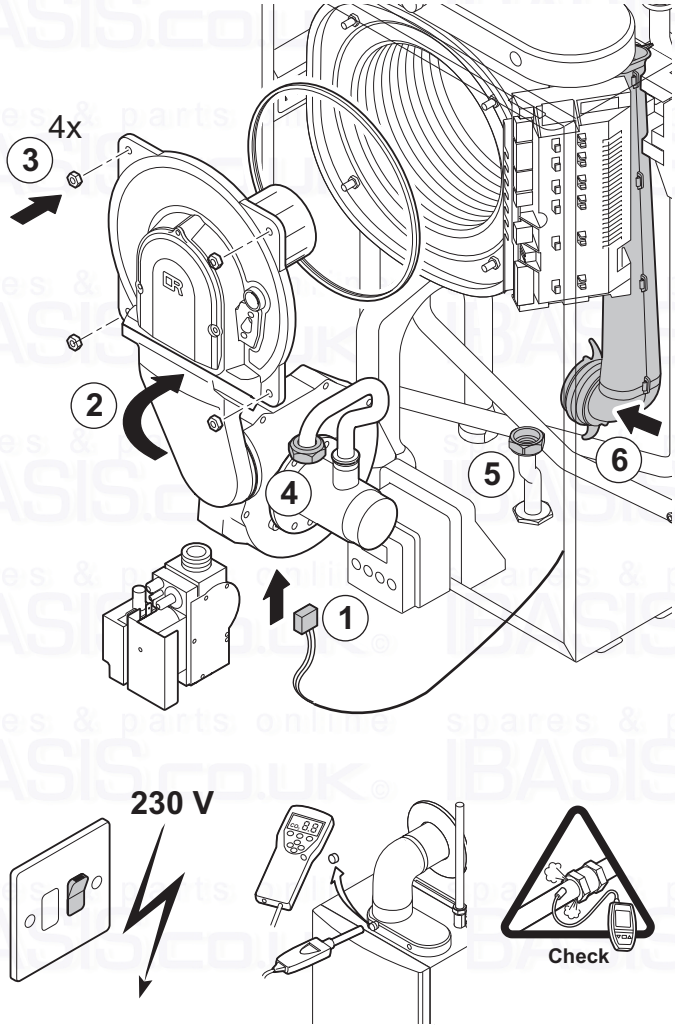

fig. 59 Assembling the boiler

59970LTGBW7H031

6. Re-Assembling the boiler and checking the combustion

- Re-assemble all the components in reverse order.

☞
- Remember to connect the fan plug again before it is completely home on the front of the heat exchanger.
- Check that the packing between the front plate and the heat exchanger has been fitted correctly.

- Switch the boiler back on.
- Check the CO_2/O_2-percentage, *2.10.3, point 4.*
- Check the ionisation current by reading the display, *see par.3.1.3*
- Check the connections on the gas block on gas-leaking.

☞
Fill in the Benchmark Service Record on the inside back pages of this document, after conducting any maintenance.

4 ERRORS

4.1 General

The Remeha Avanta has an advanced control unit. The heart of this control unit is a microprocessor, the **abc**®-control which both controls and protects the boiler. If an error is detected anywhere in the boiler, it will lock out and an error code will appear in the display.

4.2 Error codes

The Remeha Avanta displays the error codes as follows: E 2 (the display alternately shows an E and a number e.g. 2)

The meaning of the various error codes can be found in the error table, *see table 11.*

How to deal with errors:

- Make a note of the displayed error code.

The error code is important for the correct and swift detection of the nature of the error and for possible support from our technical help line 0118 978 3434.

- Press the **'reset'** key for 3 seconds. If the error code continues to appear, look for the cause in the error table below and resolve it.

Error code	Description	Possible cause	Check / solution
E 0	Flow or return sensor fault.	Short circuit in the flow, return or boiler temperature sensor.	Check the wiring and the connections of the sensors visually: are the plugs all correctly in position? With a multimeter: measure the resistance in the wiring and connection.
		Defective or not (properly) connected flow, return or boiler temperature sensor.	Check that the sensors are working; take the sensors out* and measure the resistance with a multimeter at room temperature (20 - 25°C); the sensor is working properly if the resistance is between 12 and 15 kΩ
E 1	Flow temperature is higher than the set maximum temperature	Insufficient water.	Check the water level and check for leaks.
		No through flow.	Check that the pump is working; turn the spindle with a screwdriver, if that works but the pump still does not respond, check the wiring; if that is in order the pump is faulty.
		Too much air in the system.	Vent the system.
		Deviation in the flow or return temperature sensor.	Check that the sensors are working; take the sensors out* and measure the resistance with a multimeter at room temperature (20 - 25°C); the sensor is working properly if the resistance is between 12 and 15 kΩ

E2	Return temperature is higher than the flow temperature	Insufficient water.	Check the water level and check for leaks.
		No through flow.	Check that the pump is working; turn the spindle with a screwdriver, if that works but the pump still does not respond, check the wiring; that is in order the pump is faulty.
		Too much air in the system.	Vent the system.
		Sensors not wired correctly	Check the wiring between sensors and control unit.
		Pump operating in wrong direction	Check wiring from and to control unit.
		Flow and return connections crossed	flow and return connections
		Deviation in the flow or return temperature sensor.	Check that the sensors are working; take the sensors out* and measure the resistance with a multimeter at room temperature (20 - 25°C); the sensor is working properly if the resistance is between 12 and 15 kΩ
E3	Control unit or earth fault	Mains supply not correctly earthed. Control unit faulty.	Check that the power supply from the switch spur is properly earthed, if that is the case the control unit is faulty.
E4	More than 5 start attempts without any flame formation.	No ignition spark.	Check: • the connection between the ignition wire and the ignition trafo; • the ignition wire and electrode for 'dielectric breakdown'; • the inter-electrode distance, this should be 3-4 mm; that weather the ignition electrode is properly earthed.
		A spark but no flame.	Check that: • the gas tap is open; • the gas pre-pressure is sufficient; • the gas pipe is de-aerated; • the gas valve is energised during ignition and opens; • the electrode is correctly fitted and clean; • the CO_2 adjustment at low and full load; • there is no obstruction / fitting fault in the gas pipe; • there is no obstruction in the air supply or flue (e.g. a blocked siphon); there is no recirculation of flue gasses (either inside or outside the boiler).
		There is a flame but no, or insufficient ionisation (lower than 3 or higher than 9 µA)	Check: • the flame, is the heart of the flame visible and the flame stable? • the CO_2 adjustment at low and full load; • that the ignition electrode is correctly earthed; • visual check of the ignition/ionisation electrode: look for white oxide film (remove with sandpaper or a screwdriver); look at the shape (are the pins still the original shape and is the distance between the two ends of the pins between 3 and 4 mm).
E5	No ionisation or ionisation failure more than 5 times during one heat demand.	CO_2 wrongly adjusted	Check: • CO_2 adjustment on the gas block; • Ignition/ionisation pin; • Flue/air-supply connections; • Gas flow at full load; • If there is no recirculation of flue gasses (either inside or outside the boiler).
E6	Unwanted flame formation	Ignition Unit	Faulty ignition unit, replace ignition unit.
		Control unit	Faulty control unit, replace control unit.

E7	No water in the boiler or the pump is not working	Insufficient water.	Check the water level and check for leaks.
		No through flow.	Check that the pump is working; turn the spindle with a screwdriver, if that works but the pump still does not respond, check the wiring; that is in order the pump is faulty.
		Too much air in the system.	Vent the system.
		Pump operating in wrong direction.	Check wiring from and to control unit.
		Pump not running	Check wiring, connections and pump
E8	Fan fault	Fan is not working	Check: • Fan function; • Fan wiring and connection.
		Fan does not stop	Check: • Fan function; • Fan wiring and connection; • Excess chimney draught.
E10	No through flow during venting cycle	Insufficient water.	Check the water level and check for leaks.
		Too much air in the system.	Vent the system.
		No through flow	• Check that the pump is working; turn the spindle with a screwdriver, if that works but the pump still does not respond, check the wiring; if that is in order the pump is faulty. • Open the radiator valves.
E11	Air box temperature to high	Air leakage from heat exchanger to air box	Check: • The sealing of the viewing glass; • Whether front plate of heat exchanger is properly tightened • Front plate sealing; • Whether ignition electrode is properly fitted
E13	Heat-exchanger fuse protection has responded; replace the heat exchanger after finding and solving the cause.	Heat exchanger faulty.	Check wiring between heat exchanger fuse.
		Insufficient water.	Check the water level and check for leaks.
		No through flow.	Check that the pump is working; turn the spindle with a screwdriver, if that works but the pump still does not respond, check the wiring; if that is in order the pump is faulty.
E43	Parameter limits	Automation settings	Replace dF / dU settings, *see par. 2.10.10* If this error code still returns after resetting; please contact Broag.
E44	Parameter check	Automation settings	Replace dF / dU settings, *see par. 2.10.10* If this error code still returns after resetting; please contact Broag.
E45	Default parameters	Automation settings	Replace boiler control unit.

table 11 *Error codes*

* When sensors have been taken out, be sure to replace them max. 40 mm underneath heat exchanger.

If you read out a not listed error, please report to Broag.

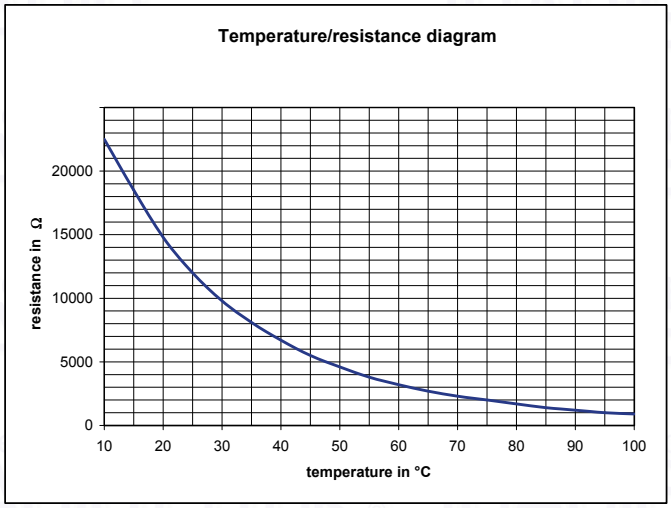

fig. 60 Sensor resistance graph

Sensor resistance

4.3 Control stop or lock-out

The code d8 , d5 or d9 can appear in the display.

- Code d8 is a control stop and will appear if the measured flow temperature (t1) is higher than the flow temperature set (T_{set} flow). The boiler will start working again automatically once the flow temperature falls below the flow temperature set.
- Code d5 is a control stop from 3 till 10 minutes and appears if the set flow temperature (t1) has already been reached and the heating demand still exists.
- Code d9 is a lock-out and appears if the maximum temperature rise is exceeded or if the ΔT between the supply and return temperature ≥ 22°C or a rate of rise in the flow temperature > 2,7°C/sec. and also at a boiler-start with nothrough flow or insufficient water. The boiler will try to restart after 10 minutes.

☞
Every 10 minutes the boiler will try to restart until the cause has been removed.

- Code d9 is a lock-out and can appear in the following situation:
  - the shut down input (between terminals 5 and 6 on X9) has been activated (= opened).

☞
The lock-out will disappear once the cause has been removed!

4.4 Error code memory

The Remeha Avanta control unit has an error code memory, in which the last 16 errors are stored. In addition to the error code (E and a number XX).
The following data is also stored:

- the number of times the error occurred (n and a number XX)
- the operating status of the boiler (St and a number XX)
- the flow temperature (t1 and the value XX) return temperature (t2 and the value XX) at the time the error occurred.

To get access to the error memory, access code must be entered.

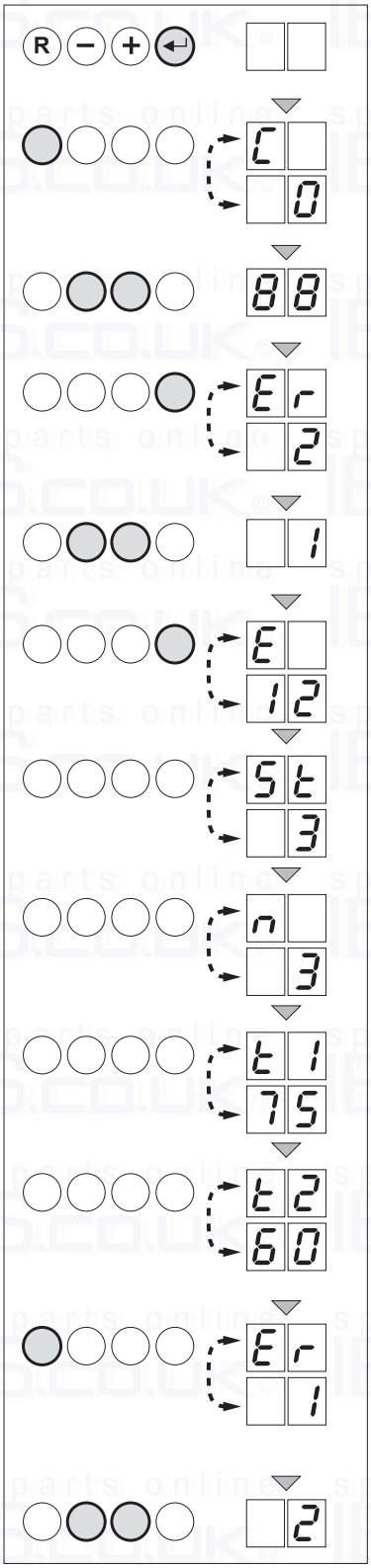

fig. 61 Error read outs

LT.AL.W7H.000.064

4.4.1 Error read outs

- Press the **[enter]**-key and keep it pressed;
- Press the **[reset]**-key until codes C and 0 appear alternately in the display;
- Enter the special access code 88 with the **[+]** or **[-]-** key;
- Press the **[enter]**-key; the display shows Er and the number of the last error alternately, for example 02.
- Press the **[+]** or **[-]**-key to go forwards or backwards in the list of errors.
- Press the **[enter]**-key to take a closer look ot the error. The display shows the error code as follows;
  - first error code E with error number e.g. 12
  - then status code St with status number e.g. 3 (burning for central heating)
  - then number of time that the error has occurred n and a number e.g. 3
  - then the flow temperature when the error occurred t1 and temperature e.g. 75
  - final the return temperature when the error occurred t2 and temperature e.g. 60

  This cycle continues to repeat itself.
- Press the **[reset]**-key to stop the cycle; the following appears in the display;
  Er and e.g the numbers 1 and 8.
- Press the **[+]** or **[-]**-key to look at the following error data.

4.4.2 Deleting errors

The last message in the list, Er followed by CL will appear in the display;

- Press the **[enter]**-key again, and the following will appear in the display: 0
- Press the **[+]**-key to set the parameter to 1.
- Press the **[enter]**-key, to delete the error memory:
- Press the **[escape]**-key twice to exit the error memory.

When tracing an error, the cause can often be found more quickly if the operating status at the time the error occurred can be retrieved from the error memory.

5 SERVICE PARTS

5.1 General

If, following the annual inspection or maintenance any part of the boiler is found to need replacing, use Remeha spare parts only or spare parts and materials recommended by Remeha.

If any component is to be replaced and it is covered by the terms and condition as described in the warranty leaflet, return the faulty component to Broag-Remeha with the details as show in table 12

Your reference		Date	
Customer			
Name			
Address			
City			
Post Code			
Contact person			
Telephone			

Part. no.	Description	Boiler serial nr.*	Model	Installation date	Problem description	Reference

table 12 Return form example

* These details can be found on the boiler type plate; the type plate is fixed to the bottom of the boiler.

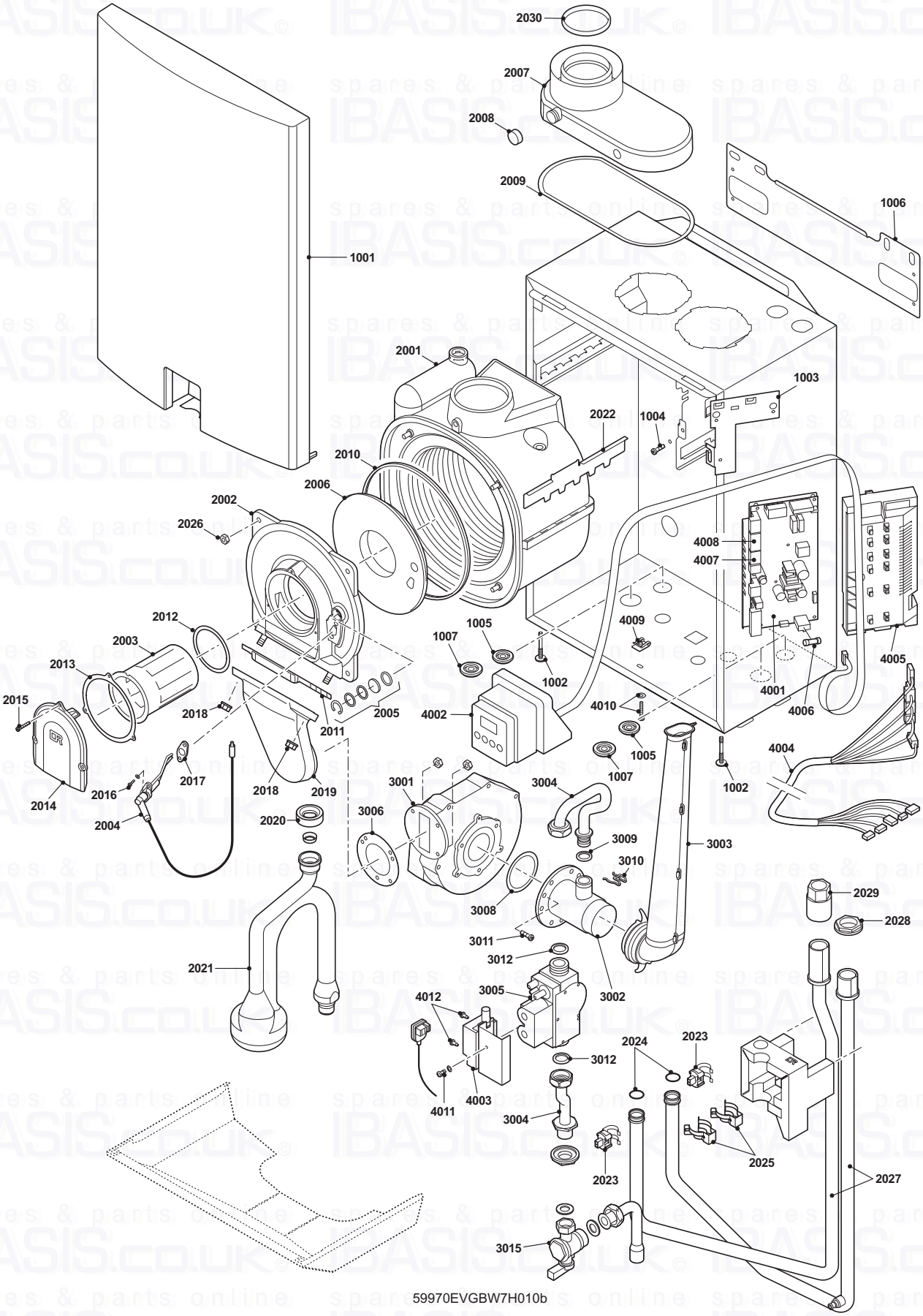

59970EVGBW7H010b

fig. 62 Exploded view Remeha Avanta

59970EVGBW7H010

Break down parts kit		
Part No	**Description**	**Position**
S100006	Heat exchanger	2001
S62741	Burner	2003
S62743	Electrode ignition/ionisation	2004
S59118	Glass inspection set	2005
S100015	Siphon assembly	2021
S58733	Sensor temperature (2 pcs)	2023
S100011	Fan assembly	3001
S58685	Gas combination block	3005
S100068	Control board	4001
S59128	Display print board	4002
S100012	Transformer ignition	4003
S43561	Fuse glass 2 amp slow (10pcs)	4006

table 13 Break down parts kit

spares & parts online IBASIS.CO.UK

6 EC DECLARATION

EC – DECLARATION OF CONFORMITY

Manufacturer		: Remeha B.V.
Address		: Kanaal Zuid 110
Town, Country		: Postbus 32, NL-7300 AA Apeldoorn
- hereby declares that the appliance(s)		: Remeha Avanta 12V, 18V, 24V

comply / complies with the specifications of the following EEC directives:

EEC Directive:	90/396/EEC	applied standards: EN 297(1994*), EN 483(1999*), EN 677(1998*)
	92/42/EEC	
	2006/95/EEC	EN 50165(1997*) EN 60335-1(1994*)
	2004/108/EEC	EN 50165(1997*) EN 55014-1(2000*), EN 55014-2(1997*) EN 61000-3-2(2000*), EN 61000-3-3(1995*)
	97/23/EEC	(art. 3, lid 3) (art.3 section 3)

CE 05

*) inclusief (eventuele) aanvulling
*) including (if any) completion

Apeldoorn, oktober 2008

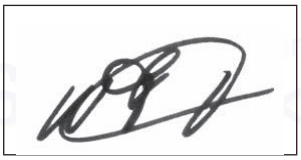

W.F. Tijhuis
Approval Manager

703/2008/10/68

7 REGULATIONS

7.1 EC regulations

The boiler meets the requirements of the EC regulations at the following directives:

- 90/396EEC Gas appliances directive
- 92/42/EEC Efficiency directive
- 2006/95/EEC Electrical low voltage directive
- 2004/108/EEC EMC directive
- 97/23/EEC Pressure equipment directive (art. 3, sub. 3)

Classification type for evacuation of the combustion products; according EN 483

7.2 Remeha factory test

Before it leaves the factory, each Remeha Avanta boiler is optimally adjusted and tested for:

- electrical safety;
- CO2- adjustment;
- hot water function
- water tightness;
- gas tightness;
- automation parameters.

7.3 Additional guidelines

In addition to the regulations and guidelines as mentioned in par. *7.1* the following guidelines in this documentation should also be observed.

It applies for all regulations and guidelines, mentioned in this Installation and Service manual, that any additions or new regulations and guidelines at the time of installation will also apply.

8 TECHNICAL SPECIFICATIONS AND WORKING PRINCIPLE

8.1 Technical data

Appliance type Remeha Avanta		12v	18v	24v
General				
Gas council number	-	41-288-09	41-288-06	41-288-10
Boiler control		modulating or on/off		
Nominal output **Pn** (80/60°C, CH)	kW	12.0	17.6	24.7
Nominal output **Pn** (50/30°C, CH)	kW	13.1	19.0	26.5
Nominal input **Qn** Hi	kW	5.8 - 12.3	5.8 - 18.0	6.1 - 25.2
Nominal input **Qnw** Hi	kW	12.3	18.0	25.2
Assembly dry weight	kg	20	20	21.5
Noise level at distance of 1m from the boiler (at full load)	dB(A)	< 44		
Gas and flue details				
Classification due to discharging flue gases	-	B23, B33, C13, C33, C43, C53, C63, C83		
Gas type permitted	-	II_{2H3p} (natural gas and propane)		
Gas inlet pressure natural gas	mbar	20 - 25		
Gas consumption natural gas maximum	m_n^3/h	1.3	1.8	2.7
Gas flue rate	kg/h	20.5	31	42.4
Gas inlet pressure propane	mbar	37 - 50		
Gas consumption propane maximum	m_n^3/h	0.5	0.7	1.0
NO_x Class [2]	-	5 [1]		
NO_x annual emission (n = 1)	ppm	< 30		
	mg/kWh	< 53		
Residual fan duty (full load)	Pa	30	40	50
CH side				
Water capacity (heat exchanger and piping)	l	1.8	1.8	2.0
Minimum operating water pressure	bar	0.1		
Maximum operating water pressure **PMS**	bar	3		
Water temperature maximum	°C	98		
Operating temperature maximum	°C	80		
Water pressure loss ΔT = 11°C	mbar	440		
Electrical				
Main supply	V/Hz	230 / 50		
Power consumption **W** maximum	W	50	50	115
in stand-by status	W	< 3		
Degree of protection	IP	X4D		

table 14 Summary of technical data

[1]) Measured according EN 483 (Class 5 complies with a limited concentration of NO_x < 70 mg/kWh)

[2]) This data applies for natural gas.

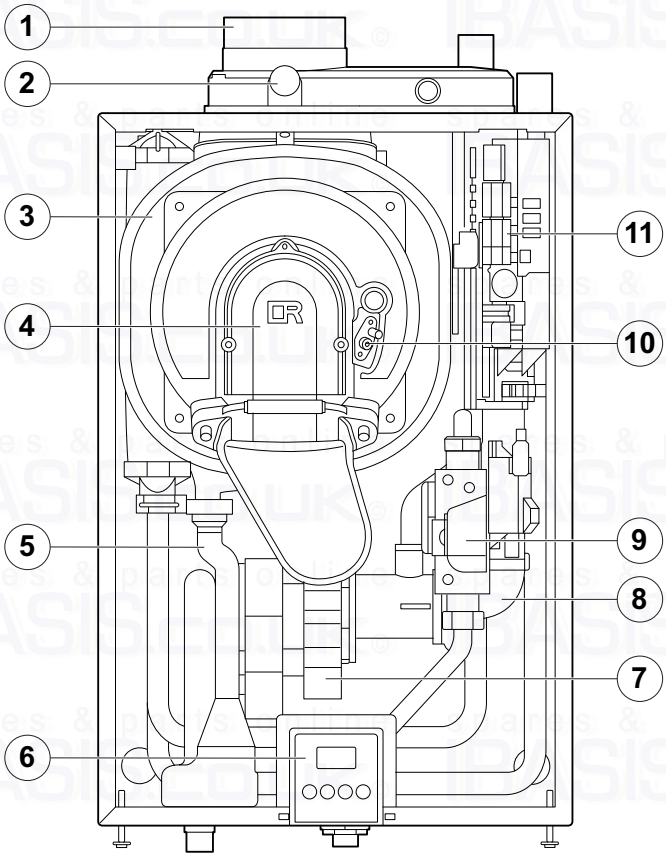

fig. 63 Components of the Remeha Avanta

59970LTGBW7H045

8.2 The boiler components

1. Flue / Air inlet connection
2. Flue gas measuring point
3. Heat exchanger
4. Front plate heat exchanger
5. Syphon
6. Control panel
7. Fan
8. Air inlet tube
9. Gas valve multiblock / Ignition transformer
10. Ignition/ionization electrode
11. Control unit

8.3 Working principle

The Remeha Avanta casing serves as a sealed air box, with air drawn in by the fan. On the outlet side of the fan is a venturi, into which a measured quantity of gas is injected based on the volume of air available. The fan speed control is dependent on the settings of the external control, the advanced boiler controller '**abc**®' and the prevailing temperatures (measured by the temperature sensors).

This method of gas/air ratio control ensures that the gas quantity is precisely adjusted to the air quantity. Thus creating optimum combustion over the whole heat input range. The gas and air is mixed in the venturi and then passes into the specially designed pre-mix burner. After combustion, the hot flue gas is directed through a specially designed, high efficiency helicoil stainless steel heat exchanger with a large surface area, and transfers its heat to the system water circulating around the coils. In the condensing part of the exchanger the water vapour in the flue gas condense within it and the heat released during this process (the so-called latent or condensing heat) is also transferred to the system water. The condensate water so formed is discharged from the heat exchanger via a siphon.

In normal operation, the boiler's flue gas discharge will produce a visible white condensing "plume" and therefore care should be taken when choosing a location for the terminal.

8.3.1 Regulating

The Remeha Avanta is a fully modulating boiler and can be regulated using one or more of the following methods;

1. Open Therm – 2 wire interface compatible with the Remeha Celcia 15 room compensator and the Remeha Celcia 20 outside weather compensator or with any other proprietor's OpenTherm® controls.
2. Open Therm thermostat in combination with an external time clock.
3. On/Off room thermostat – volt free (on the X9 terminal strip).
4. On/Off room thermostat – 230 V (on the X2 terminal strip).
5. 230 V Switching time clock – compatible with the Remeha two channel time clock or with any other appropriate time clock. For further details see *par. 2.8.*

8.3.2 Advanced boiler control ('abc®'-control)

An intelligent advanced boiler control ('**abc®**') continuously monitors the boiler conditions and ensures a very reliable supply of heat. This control system is adept at dealing with negative influences from the system such as flow reduction, airflow problems and alike. In the event of such influences, the boiler will not go to "lock-out" failure mode, but will in the first instance modulate back, and if necessary, depending on the nature of the circumstances, will temporarily switch off (shut-down or control stop), and then after a short while simply try again.

Provided that the situation is not actually hazardous, the Remeha Avanta will always try to supply heat.
The '**abc®**'- control prevents unnecessary additional call outs.

8.3.3 Regulating the water temperature

The Remeha Avanta is fitted with an electronic temperature regulator with flow and return temperature sensors. The flow temperature can be set to between 20 and 75°C, *see 2.10.8 (factory setting* 75°C). The boiler modulates it's output up and down to match the flow set point from internal or external control. When the boiler is at it's at minimum output and the flow temperature still continues to rise, once the flow set point is exceeded by 5°C the boiler will shut down on a controlled stop (code 8).

8.3.4 Low flow / water protection

The Remeha Avanta has a low-water protection based on temperature readings. By modulating down as soon as there is a risk of an insufficient water flow, the boiler will keep working for as long as possible. An insufficient water flow, however caused, - indicated by a flow/return $\Delta t \geq 22$°C or a rate of rise in the flow temperature > 1°C/sec – will be sensed by the '**abc®**' control which will shut the boiler down in a blocking mode with the display showing (code 9) for 10 minutes and before re starting.
If there is no water in the boiler or if the pump is not running, it will go to lock out (code E7) and require manual re-set.

8.3.5 High Limit temperature protection

If the flow temperature exceeds 98°C the high limit temperature protection device switches off the boiler in a lock out mode with the display showing (code E1). This mode will require a manual re-set.
When the fault is corrected, the boiler can be restarted by pressing the **reset**-key on the control panel and holding for 3 seconds.

9 EFFICIENCY DATA AND GAS EFFICIENCY LABELS

9.1 Annual efficiency

108.7 % in relation to Hi at a load of 30% and a return temperature of 30°C.

9.2 Water-side efficiency

98 % in relation to Hi at full load and an average water temperature of 70°C (80/60°C).
94.3 % in relation to Hi at full load and an average water temperature of 40°C (50/30°C).

spares & parts online IBASIS.CO.UK ©

spares & parts online IBASIS.CO.UK©

SERVICE RECORD

It is recommended that your heating system is serviced regularly and that the appropriate Service Record is completed.

Service Provider

Before completing the appropriate Service Record below, please ensure you have carried out the service as described in the manufacturer's instructions.

Always use the manufacturer's specified spare part when replacing controls.

SERVICE 1 Date

Energy Efficiency Checklist completed? Yes ☐ No ☐

Engineer Name

Company Name

Telephone Number

CORGI ID Number

Comments

Signature

SERVICE 2 Date

Energy Efficiency Checklist completed? Yes ☐ No ☐

Engineer Name

Company Name

Telephone Number

CORGI ID Number

Comments

Signature

SERVICE 3 Date

Energy Efficiency Checklist completed? Yes ☐ No ☐

Engineer Name

Company Name

Telephone Number

CORGI ID Number

Comments

Signature

SERVICE 4 Date

Energy Efficiency Checklist completed? Yes ☐ No ☐

Engineer Name

Company Name

Telephone Number

CORGI ID Number

Comments

Signature

SERVICE 5 Date

Energy Efficiency Checklist completed? Yes ☐ No ☐

Engineer Name

Company Name

Telephone Number

CORGI ID Number

Comments

Signature

SERVICE 6 Date

Energy Efficiency Checklist completed? Yes ☐ No ☐

Engineer Name

Company Name

Telephone Number

CORGI ID Number

Comments

Signature

SERVICE 7 Date

Energy Efficiency Checklist completed? Yes ☐ No ☐

Engineer Name

Company Name

Telephone Number

CORGI ID Number

Comments

Signature

SERVICE 8 Date

Energy Efficiency Checklist completed? Yes ☐ No ☐

Engineer Name

Company Name

Telephone Number

CORGI ID Number

Comments

Signature

SERVICE 9 Date

Energy Efficiency Checklist completed? Yes ☐ No ☐

Engineer Name

Company Name

Telephone Number

CORGI ID Number

Comments

Signature

SERVICE 10 Date

Energy Efficiency Checklist completed? Yes ☐ No ☐

Engineer Name

Company Name

Telephone Number

CORGI ID Number

Comments

Signature

spares & parts online IBASIS.CO.UK©

GAS BOILER SYSTEM COMMISSIONING CHECKLIST

This Commissioning Checklist is to be completed in full by the competent person who commissioned the boiler as a means of demonstrating compliance with the appropriate Building Regulations and then handed to the customer to keep for future reference.

Failure to install and commission this equipment to the manufacturer's instructions may invalidate the warranty but does not affect statutory rights.

Customer Name ____________ Telephone Number ____________

Address ____________

Boiler Make and Model ____________

Boiler Serial Number ☐☐☐☐☐☐☐☐☐☐☐☐☐☐☐☐☐☐☐☐☐☐☐☐☐☐☐☐☐☐☐☐☐☐☐☐☐☐☐

Commissioned by *(print name)* ____________ CORGI ID Number ____________

Company Name ____________ Telephone Number ____________

Company Address ____________

____________ Commissioning Date ____________

To be completed by the customer on receipt of a Building Regulations Compliance Certificate*:

Building Regulations Notification Number *(if applicable)* ____________

CONTROLS Tick the appropriate boxes

Time and Temperature Control to Heating: Room Thermostat and Programmer/Timer ☐ Programmable Room Thermostat ☐ Load/Weather Compensation ☐ Optimum Start Control ☐

Time and Temperature Control to Hot Water: Cylinder Thermostat and Programmer/Timer ☐ Combination Boiler ☐

Heating Zone Valves: Fitted ☐ Not Required ☐

Hot Water Zone Valves: Fitted ☐ Not Required ☐

Thermostatic Radiator Valves: Fitted ☐ Not Required ☐

Automatic Bypass to System: Fitted ☐ Not Required ☐

Boiler Interlock: Provided ☐

ALL SYSTEMS

The system has been flushed and cleaned in accordance with BS7593 and boiler manufacturer's instructions Yes ☐

What system cleaner was used? ____________

What inhibitor was used? ____________ Quantity ☐ *litres*

CENTRAL HEATING MODE Measure and Record:

Gas Rate ☐ m^3/hr OR ☐ *ft^3/hr*

Burner Operating Pressure (if applicable) ☐ mbar OR Gas Inlet Pressure ☐ mbar

Central Heating Flow Temperature ☐ *°C*

Central Heating Return Temperature ☐ *°C*

COMBINATION BOILERS ONLY

Is the installation in a hard water area (above 200ppm)? Yes ☐ No ☐

If yes, has a water scale reducer been fitted? Yes ☐ No ☐

What type of scale reducer has been fitted? ____________

DOMESTIC HOT WATER MODE Measure and Record:

Gas Rate ☐ m^3/hr OR ☐ *ft^3/hr*

Burner Operating Pressure (at maximum rate) ☐ mbar OR Gas Inlet Pressure (at maximum rate) ☐ mbar

Cold Water Inlet Temperature ☐ *°C*

Hot water has been checked at all outlets Yes ☐ Temperature ☐ *°C*

Water Flow Rate ☐ *l/min*

CONDENSING BOILERS ONLY

The condensate drain has been installed in accordance with the manufacturer's instructions and/or BS5546/BS6798 Yes ☐

ALL INSTALLATIONS

If required by the manufacturer, record the following CO_2 ☐ % OR CO ☐ *ppm* OR CO/CO_2 Ratio ☐

The heating and hot water system complies with the appropriate Building Regulations Yes ☐

The boiler and associated products have been installed and commissioned in accordance with the manufacturer's instructions Yes ☐

The operation of the boiler and system controls have been demonstrated to and understood by the customer Yes ☐

The manufacturer's literature, including Benchmark Checklist and Service Record, has been explained and left with the customer Yes ☐

Commissioning Engineer's Signature ____________

Customer's Signature ____________

(To confirm satisfactory demonstration and receipt of manufacturer's literature)

*All installations in England and Wales must be notified to Local Authority Building Control (LABC) either directly or through a Competent Persons Scheme. A Building Regulations Compliance Certificate will then be issued to the customer.

benchmark COLLECTIVE MARK
THE MARK OF QUALITY FOR THE INSTALLATION, COMMISSIONING AND SERVICING OF DOMESTIC HEATING AND HOT WATER SYSTEMS

©Heating and Hotwater Industry Council (HHIC)

120579-060309

120579

remeha

Broag Ltd.
Remeha House
Molly Millars Lane
RG41 2QP WOKINGHAM,
Berks.

Tel: +44 118 9783434
Fax: +44 118 9786977
Internet: uk.remeha.com
www.avantarange.com
E-mail: boilers@broag-remeha.com

© Copyright
All technical and technological information contained in these technical instructions, as well as any drawings and technical descriptions furnished by us remain our property and may not be multiplied without our prior consent in writing.